amateur radio

Vol. 34, No. 5
MAY
1966

25c

Registered at G.P.O., Melbourne, for transmission by post as a periodical

TRANSISTORS AND DIODES

AC125	9/6	95c
AC126	9/6	95c
AC127	10/6	$1.05
AC128	10/-	$1
AF114N/OC171	10/-	$1
AF115N/OC170	10/-	$1
AF116N	9/6	95c
AF117N	9/6	95c
AF118	22/-	$2.20
BC107	11/-	$1.10
BC108	10/-	$1
BC109	14/-	$1.40
OC26	26/-	$2.60
OC35/AT1138A	35/-	$3.50
OC44N	11/-	$1.10
OC45N	11/-	$1.10
OC70	12/-	$1.20
OC71/2N215	7/6 or 3 for £1	75c or 3 for $2
OC72	13/6	$1.35
OC74N	9/6	95c
OC75	13/6	$1.35
OC169	19/6	$1.95
OC170/AF115N	10/-	$1
OC171/AF114N	10/-	$1
2N217	9/6	95c
2N217S	9/6	95c
2N270	13/6	$1.35
2N370	19/-	$1.90
2N372	19/-	$1.90
BY100/OA214	16/-	$1.60
OA79	4/-	40c
OA80	3/-	30c
OA81	3/-	30c
OA90	3/3	32c
OA91	3/3	32c
OA95	3/3	32c
OA200	7/6	75c
OA210, 1N1763, 1N3194 HR25	8/6	85c
OA211, S10AR2	16/-	$1.60
1N3491 50 p.i.v. 18 a.	9/6	95c

ZENER DIODES

OAZ200	15/6	$1.55
OAZ212	12/6	$1.25
OAZ213	12/6	$1.25
OAZ225	27/6	$2.75
OAZ222/BZZ14	27/6	$2.75
OAZ224/BZZ16	27/6	$2.75

POWER TRANSFORMERS

1992	150-0-150v. 30 mA., 6.3v. 1.75a.	37/6	$3.75
1993	225v.-0-225v. 50 mA., 6.3v. 2a.	45/-	$4.50
2062	Voltage Doubler, 290, 265v. d.c. 80 mA., 6.3v. c.t. 2.25a.	67/6	$6.75
2064	Voltage Doubler, 340, 315v. d.c. 125 mA., 6.3v. c.t. 2.25a.	87/6	$8.75
2067	Voltage Doubler, 310, 285, 260v. d.c. 100 mA., 6.3v. c.t. 4a.	83/6	$8.35
	290-0-290v. 60 mA., 6.3v. 2a., 5v. 2a.	27/6	$2.75
	385-0-385v. 100 mA., 6.3v. 3a., 5v. 2a.	35/-	$3.50
	385-0-385v. 125 mA., 6.3v. 3a., 6.3v. 2a., 5v. 2a.	45/-	$4.50

AUDIO TRANSFORMERS

2624	7000 ohm s.e., 500 ohm s.e. prim.; 2, 3.7, 8, 15 ohm sec.	46/-	$4.60
4013	15 watt 6600 ohm c.t. 20% prim.; 3.7, 8, 15 ohm sec.	164/8	$16.46
4020	10 watts prim. 9000 ohm c.t. 20% Ultra Linear (Mullard 10-10), sec. 3.7 or 15 ohm		

TRANSISTOR TRANSFORMERS

TD1	Driver 3000 ohm, 2000 ohm c.t.	19/6	$1.95
TD2	Driver, 420 o. c.t., 105 o. c.t.	19/6	$1.95
TO1	Output, 375 ohm c.t., 3.5 ohm 500 mw.	16/-	$1.60
TO2	Output, 97 ohm c.t., 3.5 ohm 1 watt	18/6	$1.85
TO4	Output, 300 ohm c.t., 3.5 ohm 5 watts	37/6	$3.75

FILAMENT TRANSFORMERS

T4/4	230v., 6.3v. 2 a.	32/6	$3.25
2150	240v., 6.3v. 2.5 a., or two by 6.3v. 1.25a.	35/-	$3.50
2155	240v., 6.3v. 7.5v., 8.5v., 9.5v., 12.5v., 15v. 1 amp.	46/-	$4.60
12/64	240v., 6v. 4a., 12v. 4a.	50/-	$5.00
12/66	240v., 6v. 6a., 12v. 6a.	57/6	$5.75

ALIGNMENT TOOLS

Jabel No. 4 Alignment Tool Kits. All popular sizes. Four tools in plastic pouch. 12/-, $1.20.

TRANSISTOR SIGNAL INJECTOR

Pencil Type 2 Transistor, complete with instructions and battery. 55/-, $5.50.

LAFAYETTE TE-22 AUDIO GENERATOR

Specifications: Sine wave range: 20 c.p.s. to 200K c.p.s. in 4 bands; square wave range: 60 c.p.s. to 30K c.p.s.; freq. response: plus or minus 1.5 db., 60 c.p.s. to 150K c.p.s.; output voltage: load impedance 1M ohm 7v. (max.), load impedance 10K ohm 5v. (max.). £22/2/6, $44.25.

SPEAKERS

Well known Make, Brand New, Bankrupt Stock

Size	Voice Coil	Price	
2 inch	15 ohm	30/-	$3.00
3 inch	15 or 3.5 ohm	32/6	$3.25
4 inch	15 or 3.5 ohm	37/6	$3.75
5 inch	15 or 3.5 ohm	40/-	$4.00
6 inch	15 or 3.5 ohm	45/-	$4.50
5 x 7 inch	15 or 3.5 ohm	47/6	$4.75
8 inch	15 or 3.5 ohm	52/6	$5.25
9 x 6 inch	15 or 3.5 ohm	55/-	$5.50
12 inch	15 or 3.5 ohm	82/6	$8.25

WIDE RANGE LOUDSPEAKERS

5 inch Twin Cone Tweeter, 15w. r.m.s. (4000 c.p.s. to 16 kc.)	45/-	$4.50
6 inch Twin Cone (60-16,000 c.p.s.) 5w., available in 8 or 16 ohms	50/-	$5.00
8 inch Twin Cone (50-16,000 c.p.s.), 10w., available in 8 or 16 ohms	75/-	$7.50
12 inch Twin Cone (45 c.p.s.-10 kc.), 10w., available in 3.5 or 15 ohms	100/-	$10.00
12 inch Twin Cone (30-30,000 c.p.s.), 20w., available in 8 or 16 ohms	195/-	$19.50

SPEAKER BOXES

Plastic Speaker Box, with 4 inch speaker and wire	55/-	$5.50
Wooden Speaker Box with 6 x 4 inch speaker and wire	65/-	$6.50

CHASSIS PUNCH SET

Hozan K-83, sizes 16, 18, 21, 25 and 30 mm. Complete with taper reamer in wooden storage box	70/-	$7.00

BATTERY CHARGERS

Dual, c/w. Meter in Metal Hammertone Case

6 volt 4 amp., 12 volt 4 amp.	157/6	$15.75
6 volt 6 amp., 12 volt 6 amp.	217/6	$21.75

MICROPHONES

Crystal:—		
Piezo Lapel Type with plug	12/6	$1.25
CM20 Hand Type with plug	27/6	$2.75
X43 Stand Type with plug	37/6	$3.75
BM3 Pencil Type, 100-8000 c/s. with on/off switch, 6 ft. cable	50/-	$5.00
BM3 Desk Stand to suit above	21/-	$2.10
Dynamic:—		
Foster DF2 Hand Type, 50K	50/6	$5.05
Foster DF2 Hand Type, 50 ohm	45/-	$4.50
Foster DF3 Pencil Type, 50K	90/-	$9.00
Foster DF3 Pencil Type, 50 ohm	87/6	$8.75
Piezo X29 Desk Type with stand, low impedance	82/6	$8.25

BEZALS AND NEON INDICATORS

Sato 3280 6-8v. sub-miniature, red, green, blue	4/6	45c
NEZ Neon Indicator, 65v., flying leads	3/-	30c
230v. Red Neon Bezal	6/6	65c

PARTS FOR RTV & H TACHO

Meter (MR3P), 0-1 mA.	50/-	$5.00
7080 or 5000 r.p.m. scale ... extra	15/-	$1.50
Henry Choke, ready wound	22/6	$2.25
I.K. Trimmer Pot	4/-	40c
Circuit Board	6/-	60c

VARIABLE CONDENSERS

	Eddystone (Ceramic) ¼ inch Shaft		
530	Condenser, 13.5 pF.	22/6	$2.25
532	Condenser, 63 pF.	25/-	$2.50
584	Butterfly Cond., 32 x 32 pF.	25/-	$2.50
535	Condenser, 91 pF.	27/6	$2.75
586	Condenser, 140 pF.	38/6	$3.85
817	Transmitting Cond., 270 pF.	52/6	$5.25
	Rolar (Ceramic)		
C804	¼ inch shaft, 10 pF.	22/6	$2.25
C804	¼ inch shaft, 20 pF.	22/6	$2.25
C804	¼ inch shaft, 25 pF.	22/6	$2.25
C804	¼ inch shaft, 50 pF.	22/6	$2.25
C804	¼ inch shaft, 100 pF.	22/6	$2.25
	Roblan Broadcast Gangs		
RMG1	Single gang, 10-50 pF.	18/6	$1.85
RMG1	Single gang, 10-415 pF.	18/6	$1.85
RMG2	Two gang, 10-415 pF.	25/-	$2.50
RMG3	Three gang, 10-415 pF.	33/6	$3.35

ROTARY SWITCHES (JABEL)

3-pole, 3-position	10/-	$1.00
4-pole, 3-position	10/-	$1.00
2-pole, 6-position	10/-	$1.00
1-pole, 12-position	10/-	$1.00

TRANSISTOR RADIO PARTS

To suit Zodiac, Grays, Tele-tone, Chevron, Lincoln, Retravision, Home Star and Vista (6 Transistor Radios)

Speaker, 8 ohms, 2¼ inch diam., power capacity 200 mw.	22/6	$2.25
Gang with knob, capacity: 6-142 pF. (aerial), 6-60 pF. (oscillator)	20/-	$2.00
Aerial Coil on Rod	7/6	75c
Output Transformer, 480 to 8 ohms	15/-	$1.50
Interstage Transformer, 8000 ohms to 3000 ohms	12/6	$1.25
Oscillator Coil, 360 microhenry	8/6	85c
Pot., switched with knob, 5K ohms	8/6	85c
6 Transistors and 1 Diode (comprising: 2-2N408/OC74N, 3-2N410/OC45, 1-2N406/OC71, 1-OA90)	82/6	$8.25
Three i.f. Transformers, 455 kc.	30/-	$3.00
Complete set resistors and condensers (32)	42/6	$4.25
Printed Circuit Board	10/-	$1.00
Cabinet, complete with earphone jack, earphone and carrying cases	25/-	$2.50

CO-AXIAL CONNECTORS

American Type:—		
PL259 Co-axial Plug	9/6	95c
4087-1 Co-axial Plug (PL259, PTFE)	14/6	$1.45
SO239 Co-ax. Socket (suit PL259)	9/-	90c
4802-1 Co-ax. Socket (PTFE)	14/8	$1.47
C32-14 Co-ax. double ended female cable joiner (PTFE)	17/6	$1.75
UG175U Adaptor for PL259, to suit ¼ inch cable	2/9	28c
C32-17 Co-ax. "T" Piece, suit PL259	23/3	$2.32
BNC Series:—		
UG88CU Co-axial Plug (PTFE)	15/9	$1.58
UG290/U Co-axial Socket (PTFE)	12/6	$1.25
Belling Lee Type:—		
Co-axial Plug (suit ¼ inch cable)	4/-	40c
Co-axial Socket	3/6	35c
Co-axial Socket (flush mount)	3/6	35c
Co-axial Cable Joiner (female)	4/-	40c

THIS MONTH'S SPECIAL CRYSTALS

FT243 Holders—As New
Ex SCR536/BC611 Walkie Talkies

4080 Kc. 4735 Kc. 4950 Kc. 5360 Kc. 5780 Kc.
4397 Kc. 4815 Kc. 5205 Kc. 5385 Kc. 5852.5 Kc.
4495 Kc. 4840 Kc. 5295 Kc. 5397 Kc. 5920 Kc.
4676 Kc. 4852 Kc. 5327 Kc. 5660 Kc. 6235 Kc.
4695 Kc. 6375 Kc.

7/6 each or 3 for £1. 75c. or 3 for $2.

DC11 Holders

5980 Kc. 6420 Kc. 5980 Kc.
12/6 each or $1.25.

HAM RADIO SUPPLIERS

5A MELVILLE ST., HAWTHORN, VIC. Phone 86-6465

North Balwyn tram passes corner. **Money Orders and Postal Notes payable North Hawthorn P.O.**

We sell and recommend Leader Test Equipment, Pioneer Stereo Equipment and Speakers, Hitachi Radio Valves and Transistor Radios, Kew Brand Meters, A. & R. Transformers and Transistor Power Supplies, Ducon Condensers, Welwyn Resistors, etc.

"AMATEUR RADIO"

JOURNAL OF THE WIRELESS INSTITUTE OF AUSTRALIA. FOUNDED 1910.

MAY 1966
Vol. 34, No. 5

Editor:
K. M. COCKING VK3ZFQ

Assistant Editor:
K. E. Pincott VK3AFJ

Publications Committee:
G. W. Baty (Secretary) VK3AOM
A. W. Chandler (Circulation) VK3LC
E. C. Manifold VK3EM
W. E. J. Roper VK3ARZ

Draughtsmen:—
Ken Gillespie VK3GK
Clem Allen VK3ZIV
Ian Smith .... 36 Green St., Noble Park

Advertising Enquiries:
C/o. P.O. Box 36, East Melbourne, C.2, Vic.
or
Mrs. BELLAIRS, Phone 41-3535. 478 Victoria Parade, East Melbourne, C.2, Victoria. Hours 10 a.m. to 3 p.m. only.

Publishers:
VICTORIAN DIVISION W.I.A.,
Reg. Office: 65a Franklin St., Melbourne, Vic.

Printers:
"RICHMOND CHRONICLE," Phone 42-2419. Shakespeare St., Richmond, E.1, Vic.

★

All matters pertaining to "A.R.," other than subscriptions, should be addressed to:

THE EDITOR,
"AMATEUR RADIO,"
P.O. BOX 36,
EAST MELBOURNE, C.2, VIC.

Acknowledgments will be sent following the Committee meeting on the second Monday of each month. All Sub-Editors should forward their articles to reach "A.R." before the 8th of each month. Any item received after the Committee meeting will be held over until the next month. Publication of any item is dependent upon space availability, but in general about two months may elapse before a technical article is published after consideration by the Publications Committee.

★

Members of the W.I.A. should refer all enquiries regarding delivery of "A.R." direct to their Divisional Secretary and not to "A.R." direct. Non members of the W.I.A. should write to the Victorian Division, C/o. P.O. Box 36, East Melbourne. Two months' notice is required before a change of mailing address can be effected. Readers should note that any change in the address of their transmitting station must, by P.M.G. regulation, be notified to the P.M.G. in the State of residence, in addition "A.R." should also be notified. A convenient form is provided in the "Call Book".

★

Direct subscription rate is 30/- a year, post paid, in advance. Issued monthly on the first of the month, January edition excepted.

FEDERAL COMMENT

★

THE I.T.U. FUND—SOME PLAIN SPEAKING

It is now seven years since we sent a representative to an International Telecommunications Conference, and it is now three years since an appeal was launched to raise finance so that we could be adequately represented at the next Conference. Today this I.T.U. fund is not half way to its target amount.

In order to explain to you the implications in these three facts, let me make the following comments (made in very plain language so that you will not have to spend time "trying to read between the lines").

(1) Why do we need to attend such I.T.U. Conferences? Several persons who have very experienced backgrounds in this have said that "they wonder how long the Amateur Service can hold out against the ever increasing pressure for frequency space by the expanding commercial services." In other words, **your Amateur Bands could be taken from you or drastically reduced unless a united and high level defence against this action is made on your behalf at these Conferences.** This applies to h.f. and v.h.f., and even u.h.f., bands alike. Make no mistake about this, it will affect **all** Amateurs and S.w.l's.

(2) Such representation is costly. At least $7,000 was sought in 1963 for this purpose and it may well be that this estimate is too low on today's travelling costs.

(3) The F.E. balance sheet just presented at the Easter Convention shows a total of $3,373 subscribed to date—**not half way**. Perhaps some Amateurs have not realised how serious this matter is and there are numerous new Amateurs who have heard little about it. What about it fellers? Remember **any** contribution is welcome and you do not have to be a member of the W.I.A. to contribute.

If you still need to be convinced that you should contribute, I would be pleased to send you reprints of several excellent and realistic articles written by very enlightened Amateurs, who keep their ears close to the ground, on the possible future of our hobby. They think it is very serious.

Don't you consider your hobby to be worth fighting for? Of course you do; so please make a tangible gesture in this regard so that it can be done on your behalf. Please send your contribution to your State Divisional Secretary—NOW!

K. CONNELLY, VK3ARD, Federal Treasurer, W.I.A.

CONTENTS

Amateur Television Activities in South Australia 3
Accessory Package for Transceivers 5
6/60 Special 6
An Experimental 100 Mc. Crystal Oscillator 10
An Indoor Pylon Slot Aerial for 145 Mc. 11
Sideband:
Linear Amplifiers (continued) .. 13
Hints and Kinks: Feeder Spacers 17
Project Australis 14
W.I.A. Federal Convention—Easter 1966 15
Contest Calendar 11
Ross Hull Memorial Contest 1965-66 Results 18
Prediction Charts for May 1966 .. 19
V.h.f. Net Frequencies 14
Transistor Interchangeability List 17
New Call Signs 17
The YL Operator Club 10
Extracts from Proceedings of I.R.E.E., Aust. 10
DX 21
YRC 21
SWL 22
VHF 23
Publications Committee Reports .. 23
Federal and Divisional Monthly News Reports 24

SIDEBAND TOPICS

SWAN

SW350 Mark III. basic Transceiver with u.s.b./l.s.b. sideband selection and 100 Kcs. crystal calibrator added, inclusive heavy duty 240v. a.c. supply/speaker unit in matching cabinet	$600	£300
SW400 De Luxe Transceiver	550	275
SW410 matching all-band VFO	160	80
SW406 5-band VFO of 200 Kcs. each	100	50
VX-1 transistorised plug-in VOX operation unit	50	25
SW22 split-channel VFO adaptor	40	20

GALAXY

Galaxy V. Transceiver, u.s.b./l.s.b. selection standard feature, with plug-in crystal calibrator and heavy duty 240v. a.c. supply/speaker unit	$600	£300
Galaxy External VFO, **all-band** coverage	100	50
Galaxy Vest Pocket size plug-in transistorised VOX unit	40	20

HY-GAIN ANTENNAE

Model 14AVQ vertical 4-band 10/15/20/40 Mx Ground Plane	$44	£22
Model 18AVQ vertical 5-band 10/15/20/40/80 Mx Ground Plane	70	35
Model TH3JR 3-element junior tri-band Yagi beam 10/15/20 Mx	96	48
Model TH6DX 6-element senior Yagi beam 10/15/20 Mx	200	100

ANTENNA ROTATORS

Model CDR TR-44 for average size beams	$90	£45
Model CDR Ham-M for up to the largest beams in use	180	90
Alliance model U-98 for junior type beams	55	27½

(All rotators for 220/230v. with control unit)

WEBSTER centre-loaded all-band mobile whip, adjustable to any frequency between 3.6 and 30 Mcs., the real DX-getter, with bumper- or body-mount assembly	$48	£24
AZTEC 12v. d.c. power supplies, 300w. model	90	45
500w. model	110	55

RE-CONDITIONED USED EQUIPMENT

COLLINS KWM-2 Transceiver, with Collins PM-2 a.c. supply, Collins heavy duty 12v. d.c. supply and Collins mobile mounting unit	$1000	£500
HEATH HW-22 single band 40 Mx Transceiver, has VOX control	170	85
HALLICRAFTERS HT-37 all-band phasing Transmitter	275	137½
HALLICRAFTERS HT-32 all-band filter Transmitter	320	160
HALLICRAFTERS SX-111 Amateur band a.m./c.w./s.s.b. Receiver	175	87½
SWAN SW350 Mark II. Transceiver, spotless, near new	420	210

All equipment sold with full warranty and after-sales service

SIDEBAND ELECTRONICS ENGINEERING

P.O. BOX 23, SPRINGWOOD, N.S.W. Telephone: Springwood 51-1394

Importer-Distributor for SWAN, GALAXY, DRAKE, HY-GAIN, GONSET, AZTEC

AMATEUR TELEVISION ACTIVITIES IN SOUTH AUSTRALIA

ANDREW PIERSON, VK5ZBP/T*

THE art of Amateur t.v. transmission and reception is not new to South Australia. Transmissions by Mait Lane, VK5AO/T, and George Usher, VK5ZEY/T, were conducted for several years before the loss of the 288 Mc. band necessitated the change to 432 Mc. The purpose of this article is twofold:

(a) To inform Amateurs and interested parties of the progress made by a.t.v.

(b) To initiate interstate correspondence from persons working on similar projects.

Unlike conventional Amateur Radio, where the station constructor is also the operator, Amateur T.v. requires a large "behind the scenes" crew. With these requirements providing a large draw on the manpower of the group, it is not surprising that we utilise only two channels of the u.h.f. t.v. band for transmission. These stations are VK-5ZEY/T and VK5AO/T.

VK5ZEY/T is owned and operated by George Usher, who has an impressive array of equipment, which is housed in a separate building to his studio. His equipment consists of a 3" image orthicon studio camera with a multiple lens turret, and a camera mounted electronic viewfinder, all of which is mounted on a dolly-based tripod. This equipment is backed up by a 1" vidicon telecine' chain. The vidicon camera is fed by a remotely operated mirror diplexer providing the following picture inputs: 35 mm. movie, 16 mm. movie, 35 mm. slide, and epidiascope facilities for the A.t.v. clock and opaques.

All video is passed through the master control room, in which is situated the video mixing console, which also provides inputs for extra camera chains and outside broadcast facilities. The mixer has provision for trick effects, such as wiping, inlay, overlay, etc. The actual mixing operation is achieved with push button and a transverse quadrant fader. The sound mixing, when correctly programmed, is switched automatically with the video.

Master control is separated from the telecine' room by a sound-proof wall in which is set a plateglass window. The studio proper is in another building, for which intercommunication and cueing facilities are provided. George has three interlaced sync. pulse generators; one operational, and the other two on standby.

The transmitter at VK5ZEY/T is a vestigial sideband type, employing low level signal shaping through a standard 30 Mc. t.v. i.f. strip. The signal is then frequency changed to the 432 Mc. band, and passed to a QQE03/20 linear amplifier running 20 watts input. Standard CCIR 5.5 Mc. intercarrier sound is injected into the low level system. The antenna is a 16 element collinear array up 100 feet.

* Public Relations Officer, South Australian Amateur T.v. Group, 619 Seaview Rd., Grange.

VK5AO/T is Maitland Lane's station. Mait uses a 1" vidicon chain, a flying spot scanner, and transistorised electronic pattern and interlaced sync. generators. The video transmitter at VK5AO/T uses a QQE03/20 and high level grid modulation. The audio is fed to a separate transmitter, which is maintained 5.5 Mc. above the video carrier by means of a servo system. Audio r.f. output is from a QQE02/6 running 5 watts. Antennae, which are mounted 40 feet high, are a 16 element collinear array and a 5 element Yagi, for video and sound respectively.

George Usher (left) on I.O. camera and Alan Nation on vidicon camera during an outside broadcast.

Our outside broadcast van was built by John Ingham, VK5ZDZ/T. Inside, five viewing monitors are mounted above the control desk which houses the video and sound mixers. Three monitors are used on camera channels; one for incoming O.B's and the final monitor for an "on-air" picture.

Racks mounted in the van house the interlaced sync. pulse generator, 6 metre communication equipment, and the O.B. link transmitter. Facilities are provided for equipment maintenance in the field. The 16 element collinear array, on a 30 foot collapsible mast, is mounted on the side of the van, whereas, at the studio receiving end, a similar array 100 feet high is used. For normal a.m. sound communication, these antenna heights may seem to be excessive, but for t.v. they are only just adequate, since a good t.v. signal suitable for re-transmission requires the equivalent of at least a 40 db. over 9 a.m. audio signal on a good narrow-band communications receiver.

The transistorised vidicon chain which is used in conjunction with the O.B. van was built by Alan Nation. The camera is equipped with a zoom lens, and an in-built viewfinder, utilising an electrostatic cathode ray tube. Alan also has trick mixing facilities which, being portable, can be used in the O.B. van. All his equipment may be operated from a 12 volt car battery.

STANDARDS

All equipment built by the South Australian Amateur Television Group complies with C.C.I.R. standards, thus ensuring uniformity of performance and simple interconnection.

Our standards are:
- Sync., line drive, frame drive, blanking —4v. across 75 ohms.
- Video —1.4v. across 75 ohms.

Transmission:
- Video—negative modulation, a.m.
- Audio—5.5 Mc. intercarrier system f.m. Audio carrier above the video carrier.

Video connectors:
- Belling-Lee connectors.

Sync. and drive connectors:
- 8-pin Jones connectors.

Audio connectors:

Low level—balanced, Cannon connectors.

High level—balanced, double jacks; unbalanced, standard jacks and Belling-Lee connectors.

Horizontal antenna polarisation is used, with 16 element arrays being the most popular. Standard t.v. receivers fitted with a converter, are used for reception. Two types of converter have been tried, nuvistor and transistor. There is not much to choose between the two as far as performance is concerned, but the transistor type is much cheaper than its nuvistor counterpart.

Several demonstration telecasts have been undertaken, the major telecast occurring annually during the Adelaide Royal Show in September. The programme continues for the eight days' duration of the show, and is believed to be the biggest Amateur television broadcast in Australia. There have been two broadcasts to date; one in 1964 and one in 1965, with yet another planned for this year. The receiver is placed in the Apprentices' building, on the Weapons Research Establishment stand. Our receiving antenna is a 16 element collinear array mounted atop the Centennial Hall, which is the main Show building. With such an arrangement, the path is well and truly line of sight, and with one watt transmitter power over half a mile, the received pictures are clear and strong. Because we have r.f. to spare, conventional 300 ohm feedline is used on the long run to the Apprentices' building, where a transistor converter feeds a standard t.v. receiver.

It is indeed fortunate that VK5ZEY-/T's studios, from which our Show programme originates, are situated only a half mile from the Showgrounds. Very satisfactory pictures result, with a consistently high video bandwidth. Our programmes ranged from a discussion on frill-necked lizards, through audience participation shows (via 6 metres) and instant news spots, to outside broadcasts of a football match and scale electric car racing.

As the I.O. camera was required at the studios, two vidicon chains were used for the outside broadcasts. At the studio, the incoming signal is previewed on a separate receiver, so that the necessary adjustments can be made to the signal and antenna alignment. The signal is then fed to a monitor, which is driven from the station's sync. pulse generator. The incoming picture is slaved in, line by line until the frame pulses coincide. The master sync. generator is then locked to the incoming O.B. sync., and the studio is, in effect, then running from the sync. generator of the O.B. van, even though the O.B. programme is not on air. The studio picture can, at any time, be replaced by the O.B. picture with the push of a button on the video mixer panel.

During the shows, the production staff operated at their peak, keeping the programme, both quality and continuity wise, to a very high standard. The success of the show was primarily due to our programme co-comperes Norm Robb and John Twining, and also to the host of performers who, by providing a satisfying, balanced programme, enabled us to demonstrate the full capabiliities of the system.

The future looks bright for Amateur Television. Telecasts of the Sunday morning W.I.A. Notes are envisaged, and even now programme details are being arranged for our 1966 Royal Show programme, which promises to be better than ever. We would like to hear of Amateur Television activities in your State. Would you write an article?

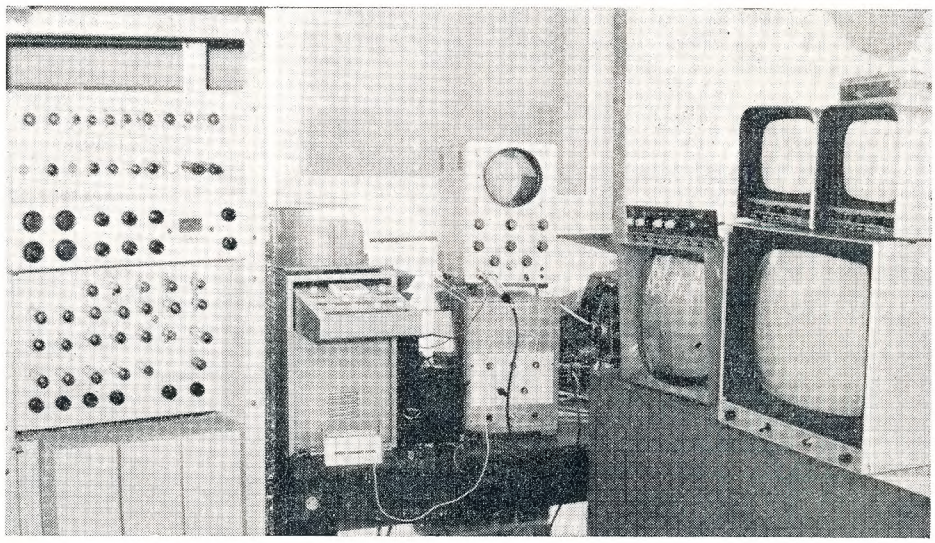

Portion of camera control equipment during a public demonstration telecast. The video switcher is situated in the O.B. van. Equipment is, from left to right: I.O. control rack, vidicon 1 control unit, vidicon 2 control unit, monitoring c.r.o's, picture preview monitors. In all, 17 monitors were used.

Phone 34-6539, write or call

WILLIAM WILLIS & Co. Pty. Ltd.

428 Elizabeth St., Melbourne

for GELOSO

Equipment and Components

BRIGHT STAR CRYSTALS

FOR ACCURACY, STABILITY, ACTIVITY AND OUTPUT

Our Crystals cover all types and frequencies in common use and include overtone, plated and vacuum mounted. Holders include the following: DC11, FT243, HC-6U, CRA, B7G, Octal, HC-18U:

THE FOLLOWING FISHING-BOAT FREQUENCIES ARE AVAILABLE IN FT243 HOLDERS:—

6280, 4095, 4535, 2760, 2524 Kc.

5.500 Kc. T.V. Sweep Generator Crystals, £3/12/6.

100 Kc. and 1000 Kc. Frequency Standard, £8/10/0 plus 12½% Sales Tax.

Immediate delivery on all above types.

AUDIO AND ULTRASONIC CRYSTALS—Prices on application.

455 Kc. Filter Crystals, vacuum mounted, £6/10/0 each plus 12½% Sales Tax.

ALSO AMATEUR TYPE CRYSTALS—3.5 AND 7 Mc. BAND.

Commercial—0.02% £3/12/6, 0.01% £3/15/6, plus 12½% Sales Tax.

Amateur—from £3 each, plus 12½% Sales Tax.

Regrinds—Amateur £1/10/0, Commercial £1/17/6.

CRYSTALS FOR TAXI AND BUSH FIRE SETS ALSO AVAILABLE.

We would be happy to advise and quote you.

New Zealand Representatives: Messrs. Carrel & Carell, Box 2102, Auckland.

Contractors to Federal and State Government Departments.

BRIGHT STAR RADIO

46 Eastgate Street, Oakleigh, S.E.12, Vic. **Phone: 57-6387**

With the co-operation of our overseas associates our crystal manufacturing methods are the latest.

Accessory Package for Transceivers*

Multifunction Adaptor for Improved C.W. Performance

JOHN J. SCHULTZ, W2EEY/DJ0BV

MOST transceivers on the market today are designed primarily for mobile operation. In an effort to keep the size to a minimum, some of the features found desirable in home-station use are often sacrificed—particularly those special qualities needed for present-day c.w. work. After a few hours of operation, the corners that have been cut become evident, and one begins to think of a number of accessories that could be added to enhance the performance in fixed station operation.

In connection with my NCX-3, I felt it desirable to limit revisions to those possible with only the simplest of alterations in the original wiring. Nevertheless, it turned out that several attractive features could be provided within this restriction:

(1) Audio-type noise limiter.
(2) Audio filter for c.w. selectivity.
(3) Side-tone oscillator for c.w. monitoring.
(4) 100-Kc. crystal calibrator.

All of these functions are provided by an adaptor unit which plugs into the accessory socket, after a few very simple changes in original wiring have been made. None of these changes in any way affects the original operation of the transceiver. Since most of the modifications are applied to the audio section, they can be adapted quite easily to transceivers other than the NCX-3.

NOISE LIMITER

Fig. 1 shows the schematic of the adaptor unit. The 6AL5 serves as a conventional full-wave shunt limiter, with the clipping level set by potentiometer R1. The effectiveness of such a limiter on s.s.b., as compared to a Bishop-type i.f. noise limiter, is debatable but, in this case, the main purpose of the limiter is to remove the strong clicks caused by switching lights and appliances, which are usually bothersome in home-station operation. This is accomplished easily enough by audio limiting. Also, no work has to be done on an i.f. circuit as would be required for the Bishop limiter. The audio line between the product detector and the first audio stage in the transceiver is the only connection that has to be brought out.

AUDIO FILTER

The shunt limiter is followed by an audio filter for c.w. The filter shown in the schematic is a simple, single, parallel-tuned circuit using a high-Q inductor, such as the UTC type MQA, and tuned to about 800 cycles. However, any other desired audio filter, such as the OCO multisection filter[1] (minus the input transformer and transistor amplifiers), may be used, depending on how elaborate you want to make the unit. In any case, c.w. will be much more of a pleasure to copy than with the 2- to 3-Kc. s.s.b. bandwidth of the transceiver. R2 is used for coarse adjustment of the selectivity of the filter. It is not absolutely necessary, but is useful in relieving the ring of a sharp filter when conditions do not warrant maximum selectivity.

* Reprinted from "QST," January, 1966.

[1] Gensler, "The OCO Audio Filter," "QST," January, 1962.

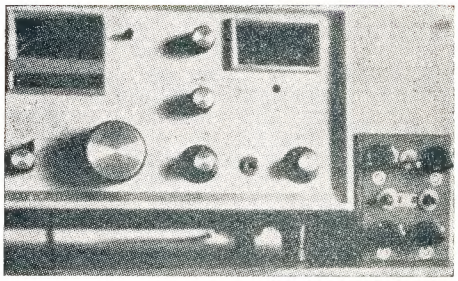

The multipurpose adaptor is shown here next to the NCX-3.

CRYSTAL CALIBRATOR

The 100-Kc. calibration oscillator is adapted from the "ARRL Handbook." L2 is broadly resonant in the 14-Mc. range. I used this circuit, instead of the conventional one-stage arrangement, because, after trying most of the one-stage circuits, I have never been satisfied with the output above 14 Mc. It has always been difficult to find the 100-Kc. markers on 10 metres, unless the antenna is disconnected. The NCX-3 does not cover bands higher than 14 Mc., of course, but, since I wanted to make the adaptor suitable for use with other equipment covering the higher-frequency bands, I decided to incorporate a calibration oscillator that could be easily heard. R4 is used to reduce the output on 80 and 40 if necessary.

SIDE-TONE OSCILLATOR

The c.w. side-tone oscillator is conventional. It produces a tone of about 800 cycles with the values shown. The tone can be varied by changing the value of the capacitor across the output transformer primary; probably some experimenting with the value of this capacitor will be necessary anyway, depending on the transformer used. R3 serves mainly as a volume control, although it does vary the tone slightly. The blocking-bias connections in a grid-block-keyed transceiver can be made at the key terminals directly, or internally in the transceiver. The loud-speaker connections may also be made directly to the station loud speaker, or a small 2- or 3-inch loud speaker might be included in the outboard unit. Note that only one section of the 12AU7 dual triode is used and also only one side of the heater (to

(Continued on Page 10)

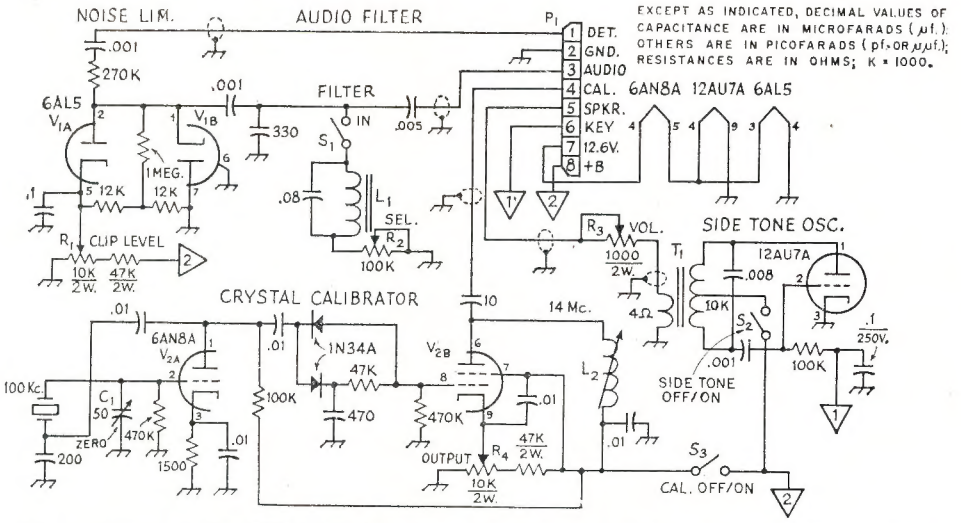

Fig. 1.—Circuit of the NCX-3 adaptor. Fixed capacitors of decimal value are paper, mylar, or disc ceramic; others are mica. Fixed resistors are ½ watt.

C1—Air trimmer.
L1—0.5-henry high-Q inductor (UTC MQA-10).
L2—5-10-µh. slug-tuned coil (Miller 4406, or similar).
P1—Octal plug.
R1, R2, R3, R4—Linear control.
S1, S2, S3—S.p.s.t. toggle switch.
T1—Output trans., 10,000 ohms, plate-to-plate, to 4 ohms.

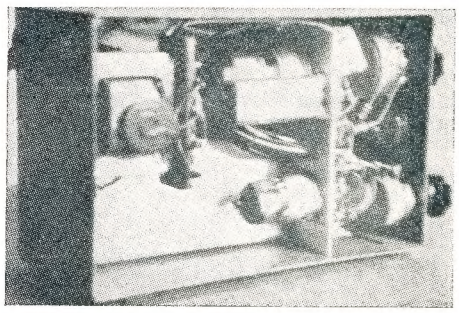

T1 is in the upper left-hand corner, above the i.f. can which houses the audio filter. Across the top of the partition are the 100-Kc. crystal, the 6AN8A, and the 12AU7A (hidden in this view). The tube below the crystal is the 6AL5.

6/60 SPECIAL*

An All-Mode Transmitter for 6

JOHN S. RAYDO, K0LMZ

THE transmitter described in this article was built to satisfy the need for a flexible rig of moderate power for the 6-metre band. It features a built-in high-stability v.f.o., broadband exciter, high-level plate modulation, mixed keying for c.w., and with the addition of a 20-metre s.s.b. signal, is a s.s.b. transmitting converter. All parts, with few exceptions, are standard and may be purchased from most large distributors.

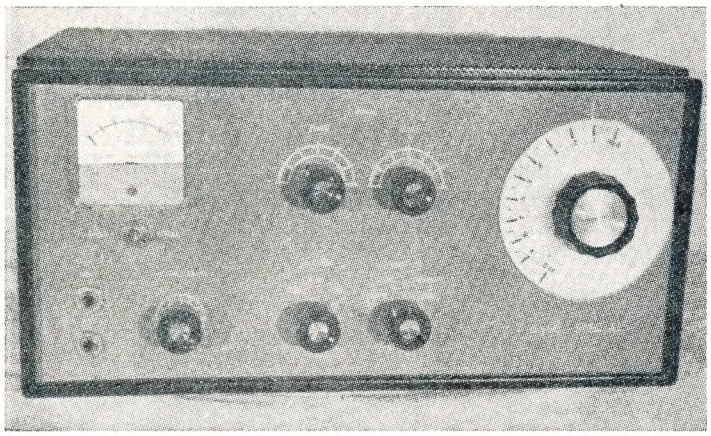

Fig. 1.—Front view of the 6-60 Special, showing layout of the panel.

CIRCUIT DETAILS

The built-in v.f.o. is used for a.m. and c.w. operation. The oscillator uses the familiar Colpitts circuit, operating between 14 and 15 Mc., with the plate circuit tuned to 14.5 Mc. The tube socket and tuning capacitor are ceramic-insulated. Long leads and unnecessary stray capacitance are avoided. The oscillator coil is solidly mounted to prevent vibration.

The output from the v.f.o. is injected into the grid of the mixer along with 36-Mc. energy from an overtone oscillator, V2B. On a.m. and c.w. the mixer selects the sum of these two signals in a high-L/C plate circuit tuned to 50.5 Mc. This heterodyne method of obtaining 50-Mc. signal results in higher 6-metre stability with a v.f.o. If the transmitter is used as an s.s.b. converter, the v.f.o. is disabled and in its place, 20-metre s.s.b. of low level is injected into the mixer cathode.

The 50-Mc. energy is amplified by the 12BY7 buffer, V3. The output circuit of this stage is a broad-band coupler. This coupler provides near-optimum coupling efficiency, yet has sufficient bandwidth to permit operation across the first megacycle or so, without retuning the exciter.

The 6146 amplifier stage has a shunt-fed pi-network plate circuit. For best stability the stage is neutralised. Choke RFC5 is provided to short out the d.c. voltage that would appear on the output circuit if C13 should break down. The choke in the plate lead, Z1, is for parasitic suppression. Note that each of the three cathode leads is bypassed separately at the socket and that the screen is bypassed directly to the cathode, rather than to ground.

The modulator section, used only for a.m., has a 12AX7 driving a pair of 6BQ6GTB tubes operating Class AB2. The power supply uses a choke-input filter and silicon rectifiers in a bridge circuit. A high voltage of about 575 volts and a low voltage of about 275 volts are produced under load. A small filament transformer, reverse connected and hooked to the filament line, provides fixed bias. Practically all control of the transmitter, except for an external antenna relay, is performed by the bias network.

R2 permits setting the 6146 to Class AB2 for s.s.b. operation. On a.m. and c.w. the fixed bias is high enough to limit plate current to a safe value and when grid current flows, the voltage drop across the resistance from the arm of R2 to ground will shift the final amplifier into Class C operation. The ground side of controls R2 and R3 is transferred by the function switch, S2C, and the control relay. If the line is not grounded in the "operate" position, with the push-to-talk mike switch open, the full 120-volt bias cuts off tubes V2A, V3, V4, V6 and V7. If a relatively low resistance, R1, is connected in the line, these tubes are almost cut off, and a low-level spot signal results. Relatively few contacts are needed on the function switch with this method of control and the relay switches less than 7 mA. at 140 volts. R1 may be replaced by a panel-mounted 25K control if variable spotting injection is desired.

CONSTRUCTION

The unit is built on a 14 x 10 x 3-inch chassis with a 15 x 6½ x 0.0900-inch panel, and fits into a handmade cabinet.[1] Other types of cabinets (such as the standard rack styles) may be used. All sockets, terminal strips and other parts are securely mounted with shakeproof washers under the mounting nuts. A neat-looking unit can be obtained by dressing the leads and components in parallel lines or at right angles. D.c. and a.c. leads can be trucked out of the way along the edges of the chassis, while r.f. leads should be as direct as possible. The wiring can be harnessed to add to the eye appeal of the unit. Avoid the use of stranded wire when assembling the circuit. Where this wire must be used, be careful to avoid wild

[1] Peck, "Home-Brew Custom Designing," "QST," April, 1961.

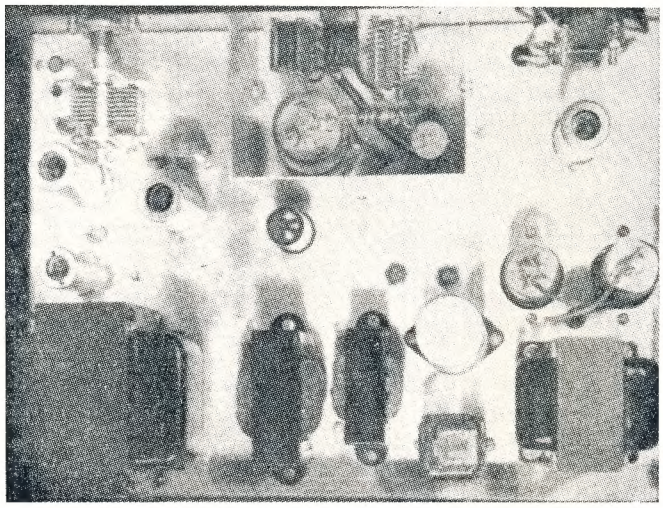

Fig. 3.—Top view of the chassis, showing placement of tubes and other components.

* Reprinted from "QST," January, 1966.

strands that stray over to an adjacent terminal and result in a short circuit. The location of most of the major components can be seen by referring to the photographs.[2] The plate circuit of the 6146 is shielded by a 3¾ deep x 4⅝ wide x 3½ high U-shaped bracket. This shield is attached to the chassis with three spade bolts. Below the chassis, the grid circuit of the 6146, and the 12BY7 plate circuit, are enclosed by a similar 3¼ x 5 x 2½-inch bracket. This shield is notched where it passes over the 12BY7 socket.

[2] The author will supply full-scale templates of the chassis and panel at a cost of $2.

The type of socket used for the final-amplifier tube is important. Do not use the common moulded socket with an elevated grounding ring having 4 lugs spaced around its circumference. Grounding should be done to lugs placed under the nuts used for mounting the socket. It is imperative that the bypass capacitor connections be made with virtually no leads at all, in the buffer and final-amplifier stages. The 6BQ6 modulator tubes are sub-mounted in the chassis with one-inch spacers. The newer 6BQ6GTB tubes must be used if the height of the transmitter is to remain at 6½ inches. The vernier drive for the v.f.o. capacitor is a Jackson 4511/DAF with a 6:1 ratio,[3] mounted behind the front panel so that the v.f.o. dial clears the panel by about 1/16-inch. The dial is a 4-inch disc of ⅛-inch translucent plastic, calibrated with a Datak lettering set.[4] Several light coats of clear plastic spray will prevent the markings from rubbing off. Illumination may be added by cutting a small fan-shaped window in the panel behind the dial. A small bulb assembly will

[3] Arrow Electronics, Inc., 900 Broad Hollow Road, Farmingdale, N.Y.

[4] The Datak Corp., Dept. 6111-2, 63 71st St., Guttenberg, N.J.

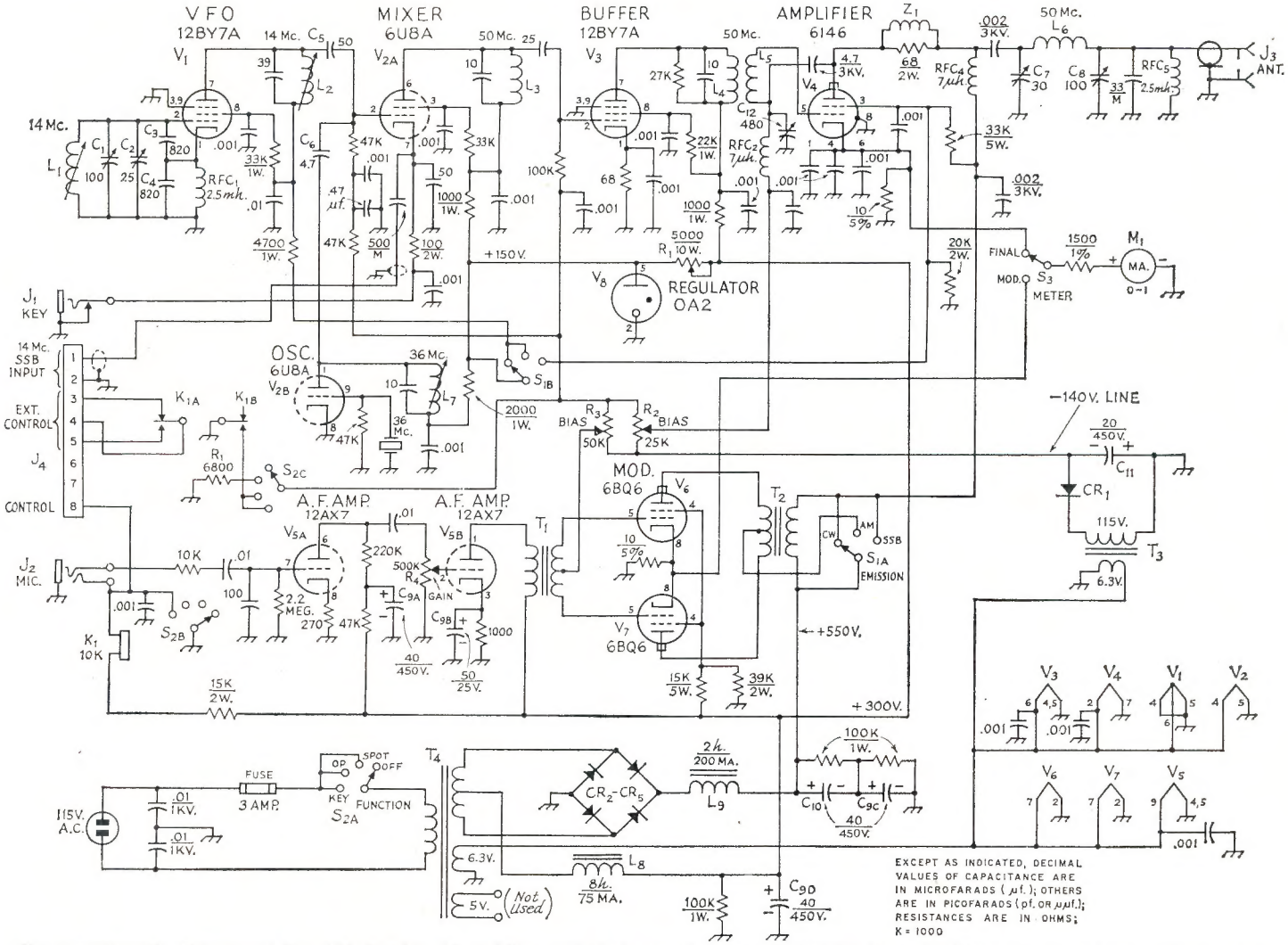

Fig. 2.—Schematic diagram of the 6/60 Special. M is Mica. Polarised capacitors are electrolytic type. Resistors are ½-watt composition unless otherwise noted.

C1—100-pf. variable (Bud 1855).
C2—25-pf. trimmer (Hammarlund APC-25).
C3, C1—820-pf. silver mica.
C5—50-pf. silver mica of NP0 disc.
C6—4.7-pf. silver mica of NP0 disc.
C7—30-pf. variable (Hammarlund HF-30-X).
C8—100-pf. variable (Hammarlund HF-100).
C9—40-40-40 µF. at 450 volts, 50 µF. at 25 volts, can-type electrolytic (Cornell-Dubilier Electronics DO663.2).
C10—40 µF. at 450 volts, tubular electrolytic (Cornell-Dubilier Electronics BR 40-450).
C11—20 µF. at 450 volts, tubular electrolytic (Cornell-Dubilier BR 20-450).
C12—80-480-pf. mica trimmer.
CR1—400 p.i.v., 500-mA. silicon diode.
CR2-CR5, inc.—800 p.i.v., 500-mA. silicon diodes.
J1—¼-inch 2-conductor shorting jack (Switchcraft 12A).
J2—¼-inch 3-conductor jack (Switchcraft 12B).
J3—Co-axial chassis fitting (SO-239).
J4—Octal socket.
K1—D.p.d.t. plate relay, 10,000-ohm coil (Potter and Brumfield KCP11).
L1—4 turns No. 16, ¾ inch long, on ½-inch diam. iron-slug form (North Hills 1300C).
L2—15 turns No. 20, close-wound on ⅜-inch diam. iron-slug form (Miller 21A000RB1).
L3—9 turns No. 16, air-wound, ½-inch diam., 1 inch long.
L4—9 turns No. 16, air-wound, ½ inch. diam., ⅞-inch long.
L5—7½ turns No. 16, air-wound, ½-inch diam, ¾ inch long.
L6—5 turns No. 12, air-wound, ⅞-inch diam., ¾ inch long.
L7—6 turns No. 22, ½ inch long, on ⅜-inch diam. iron-slug form (Miller 21A000RB1).
L8—8-hy. 75-mA. filter choke (Stancor C1355).
L9—2-hy. 200-mA. filter choke (McGee Radio 2H-200 or C200-45).
M1—0-1-d.c. milliammeter, calibrated 0-150 mA. (Lafayette 99G2514).
R1—5000 ohm, 10-watt resistor (adjustable).
R2—25,000 ohm, 2-watt potentiometer, screwdriver adjustable (Ohmite CLU2531).
R3—50,000 ohm potentiometer screwdriver adjustable (Ohmite CLU5031).
R4—0.5 megohm control, audio taper (IRC-Q13-133).
FC1, RFC5—2.5-mh. r.f. choke (National R50).
RFC2, RFC4—7-µh r.f. choke (Ohmite Z-50).
S1—3- pole 3-position single section phenolic rotary switch (Centralab PA-1007).
S2—3-pole 4-position 2 section ceramic rotary switch (Centralab PA-1012).
S3—S.p.d.t. toggle switch.
T1—1:3 interstage transformer (Stancor A-53-C).
T2—25-watt modulation transformer (Stancor A-3845). Use 8000-ohm tap on secondary.
T3—Fil. trans. 6.3-volt 1.2 amp. (Stancor P-6134).
T4—Power transformer: 560 v. ct., 250 mA.; 6.3 v., 8 amp.; 5 v., 3 amp. (not used). (McGee Radio 961761-1).
Z1—3 turns No. 16, ½ inch long, wound on 68-ohm 2-watt resistor.

WARBURTON FRANKI

• NEWMARKET PACKAGED CIRCUIT AMPLIFIERS

SPECIFICATION DETAILS:

Performance Data	PC1	PC2	PC3	PC4	PC5	PC7	PC9
Power Output mW. ..	150	400	400	400	3W	800	Pre-Amp.
Input Impedance ohms	1.5K	1K	2.5K	220K	1.5K	1.5K	1M
Output Impedance—ohms	40	15	15	15	3	8	600
Supply Voltage—volts	9	9	9	9	12	9	9
Typical distortion %	2	3	3	3	3	3	1
Frequency response	300-15K	200-12K	200-12K	200-12K	50-12K	50-12K	20-20 K
Overall Dimensions .... All ¾ in. high	2x1	2½x1½	2½x1½	2½x1½	5½x1¾	3x1¾	2x1
PRICE	**$5**	**$6.27**	**$6.27**	**$6.27**	**$12.47**	**$7.53**	**$4.50**

Plus Sales Tax 12½% and postage.

SUGGESTED APPLICATIONS

PC1—Audio Amplifier.
Intercom. „
Lab. Instr. „

PC2—Modulator Drive Stage.
Church Hearing Aid Amplifier.
Tape Replay Amplifier.
Mine Communication Amp.
Telemetry Audio Amp.

PC3—D.C. Relay Driver.
Sound-level Meter Amp.
Low power Battery Stereo.
Heating and Ventilating Control Amp.

PC4—G.P. Amp. and Drivers
Office Dictating Machines.
Listening Booth Amps.

PC5—Portable Audio Amps.
Car Radio Audio Amps.
Servo Amplifier.
Tape Relay Amp.
Automation Drive Amp.
Burglar Alarm Amp.

PC7—Tape Language Lab.
Telephone Dictating Machine Amps.
Control Amp. for Textile Machinery.

Write or Call for Data Leaflet.

• Special

• IRISH BRAND MYLAR • RECORDING TAPE

• American Professional Quality

3″	225′	70c	each	plus	Sales	Tax	12½%
5″	900′	$2.25	„	„	„	„	„
5¾″	1150′	$3.00	„	„	„	„	„
7″	1800′	$3.75	„	„	„	„	„
7″	2400′	$5.55	„	„	„	„	„

Please add postage.

• TELEVISION REPLACEMENT COMPONENTS

Telecomponents and Radar Brands Stocked.
Write or Call for Data and Price Lists.

• TANTALUM CAPACITORS

Available from Stock.

SOLID, SMALL-BEAD TYPE, RESIN DIPPED

50	μF.	3	v.w.	Size:	8.1	mm.	x	5.6	mm.	46c	each
40	„	„	„	„	„	„	x	„	„	„	„
30	„	„	„	„	7.6	„	x	4.9	„	„	„
20	„	6	„	„	8.1	„	x	5.6	„	„	„
15	„	10	„	„	„	„	x	„	„	„	„
10	„	15	„	„	„	„	x	„	„	„	„
7	„	20	„	„	„	„	x	„	„	„	„
5	„	25	„	„	„	„	x	„	„	„	„
4	„	35	„	„	„	„	x	„	„	„	„
3	„	35	„	„	7.6	„	x	4.9	„	„	„
2	„	„	„	„	„	„	x	„	„	„	„
1.5	„	„	„	„	6.6	„	x	4.1	„	42c	„
1.0	„	„	„	„	„	„	x	„	„	„	„
.7	„	„	„	„	6.1	„	x	3.6	„	„	„
.5	„	„	„	„	„	„	x	„	„	„	„
.4	„	„	„	„	„	„	x	„	„	„	„
.3	„	„	„	„	„	„	x	„	„	„	„
.2	„	3	„	„	„	„	x	„	„	„	„
.15	„	„	„	„	„	„	x	„	„	„	„
.1	„	„	„	„	„	„	x	„	„	„	„

Above Prices are plus Sales Tax 25% and Postage.

WARBURTON FRANKI

220 PARK ST. SOUTH MELB., VIC. PHONE 30 lines **69-0151**

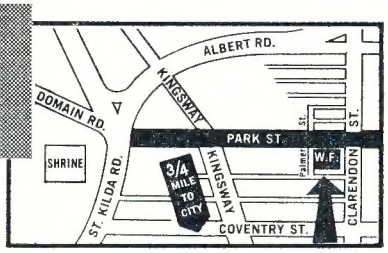

• *TRADE ALSO SUPPLIED*

• *Please include postage or freight with all orders*

softly illuminate the dial near the pointer. A 0-1-mA. clear plastic meter, calibrated 0-150 mA., is used to measure the cathode current for both the final amplifier and modulator. Originally an S meter, this unit was chosen because it could be illuminated. The original scale was removed by rubbing with a household cleaner and re-calibrated with a Datak neter-marking kit. Other 0-1 mA. meters may be used in place of the one specified.

Special care should be taken in all phases of construction, especially with external details such as the front panel. This particular unit received a coat of primer and three coats of blue hammertone paint. After the decals were applied, a final coat of clear plastic was added. The use of black knobs, and a cabinet of contrasting black accentuates the panel. The meter is complemented by the v.f.o. dial, yet no monotonously perfect symmetry is evident. It seems strange that so much home-brew equipment is so well engineered and yet so little time is spent trying to make it look like a commercial rig. The payoff is in greater satisfaction and the excellent possibility of selling the rig later on, at a profit.

ADJUSTMENT PROCEDURE

Initial check out and alignment are conducted as follows: Remove the 6146 and 6BQ6 tubes from their sockets. All other tubes should be left in place. Turn the emission switch to c.w. and the function switch to "key." All tubes should light, and power-supply voltages should be close to 300, 700, and —150 volts under light load. Adjust the v.f.o. coil, L1, and trimmer C2 to cover 14 to 15 Mc., while listening on a receiver to the fundamental or a harmonic. Peak the plate coil, L2, at 14.5 Mc. Adjust L7, the overtone oscillator coil, until the crystal oscillates cleanly at 36 Mc. Adjust L3 in the mixer plate circuit by squeezing or spreading the turns until it peaks at 50.5 Mc.

Turn the transmitter to the "off" position. Plug the 6146 and 6BQ6 tubes into their sockets. Temporarily connect a shorting wire across L5, in the bandpass coupler. Tune L4 to 50.5 Mc. in a similar manner to L3. The two coils should be separated by about ½ inch. Remove the shorting wire after adjustment is complete.

The next step is to neutralise the 6146 amplifier. Open the heater circuit to the 6146 stage during this process. Turn the emission switch to c.w. and the function to "key." Peak the output pi network for maximum output, using a sensitive wavemeter coupled to L6: Neutralise the 6146 by adjusting C12 for minimum feed-through. Be sure to resonate the plate circuit after each adjustment of C12, and take suitable precautions with the high voltage present in the plate circuit.

After neutralisation is complete, plug an open-circuited key into the c.w. jack, and switch the emission mode to s.s.b. Adjust the final-amplifier bias control, R2, for 15 mA. final plate current. Turn the emission switch to a.m. and the function switch to "operate," and adjust the modulator bias control, R3, for 25-mA. modulator current. Switch the meter back to read final plate current. Connect a dummy load to the unit. Remove the key and close the mike push-to-talk switch. Dip and load the final to 110 mA. Switch the meter to read modulator plate current and adjust the mike gain until the meter kicks up to about 80 mA. on voice peaks. A check with a scope will indicate more precisely the point of 100 per cent. modulation. When the push-to-talk switch is released, both the final and modulator plate currents should fall to zero. Resting plate current for the final, when in the c.w. mode and key open, should be close to 15 mA. "Key" function is the tune position for all modes and is the c.w. position. "Operate" function is the push-to-talk position for a.m., the external control position for s.s.b. and the c.w. standby position.

To check s.s.b. converter operation, switch the emission to s.s.b. and the function to "key." The final amplifier should draw 15 mA. of plate current and the a.m. modulator should draw no current. Inject about 5 watts of 20-metre s.s.b. signal into Pins 1 and 2 of J4. The final amplifier should kick up to about 70 mA. on voice peaks, for an input of about 65 watts p.e.p. If you have a surplus of drive, add an attenuation pad between the s.s.b. exciter and the transmitter.[5] The s.s.b. exciter will control the transmitter if Pin 8 of J4 is grounded on "transmit," through an extra contact on the s.s.b. exciter relay. An antenna relay may be controlled through Pins 3, 4, and 5. To check the spotting level, switch the function to "spot." A moderate signal should be heard in the 6-metre receiver. If the signal is of excessive strength, increase the value of R1, and conversely, if insufficient signal is present, reduce R1.

The transmitter has been in operation for several months now and has given me no trouble. It seems to "get out" well and numerous stations have commented on its excellent operation in all modes. The advantages of high-level modulated a.m., s.s.b., break-in c.w. and a high-stability v.f.o., make this a useful rig. Build one and I'm sure you'll agree! ●

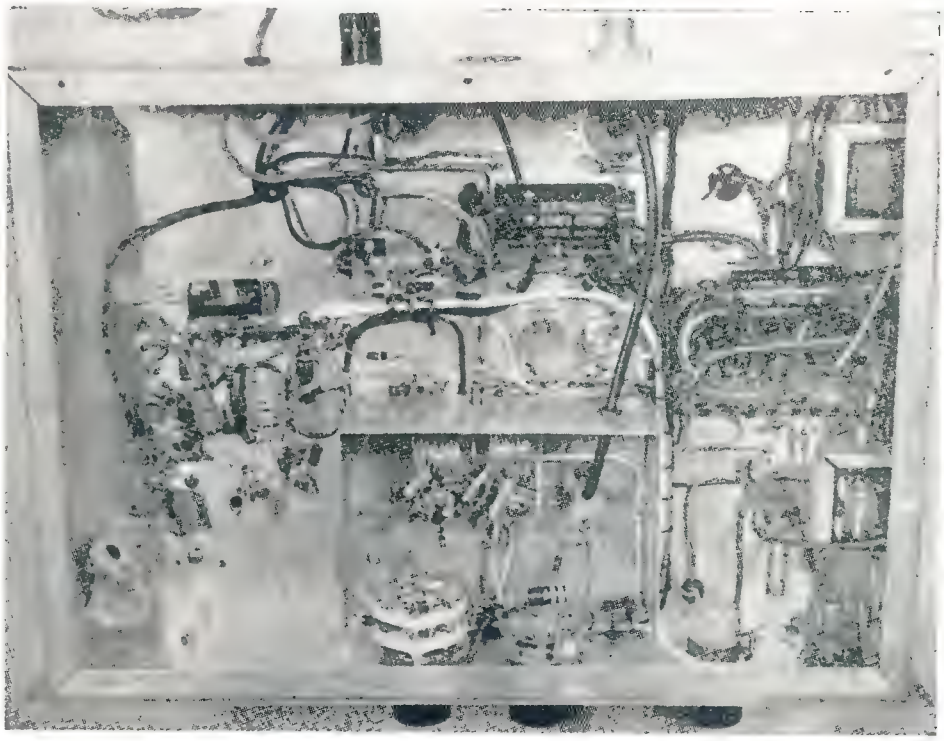

Fig. 4.—Under-chassis view of the unit, showing placement of shield compartment and various components.

[5] Hubbell, "A Step-Type R.F. Attenuator," "QST," December, 1959.

AMATEUR FREQUENCIES:
USE THEM OR LOSE THEM!

Wireless Institute of Australia
Victorian Division

A.O.C.P. CLASS

commences

MONDAY, 2nd MAY, 1966

Theory is held on Monday evenings, and Morse and Regulations on Thursday evenings from 8 to 10 p.m.

Persons desirous of being enrolled should communicate with—Secretary W.I.A., Victorian Division, P.O. Box 36, East Melbourne (Phone: 41-3535, 10 a.m. to 3 p.m.), or the Class Manager on either of the above evenings.

AN EXPERIMENTAL 100 Mc. CRYSTAL OSCILLATOR

The circuit shown grew out of efforts to produce a simple (?) 1296 Mcs. solid state converter. By using a fairly high initial frequency in the oscillator much of the electronics could be eliminated as most of the 1296 converter designs to date are oscillator-multiplier chain. Therefore, it has been calculated that a converter using a crystal near 100 Mcs. need consist of only 2 diodes and 4 transistors. As to how the overall design works out remains to be seen, but at least here is the oscillator.

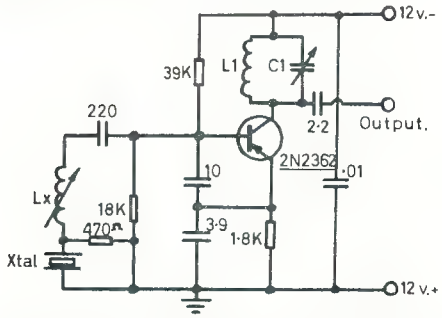

Fig. 1.—Experimental 100 Mc. Xtal Oscillator.
L1-C1—Chosen to resonate at twice crystal frequency (200 Mc.).
LX—5 turns 32 B. & S. ⅛ inch former (Nesoid slug material SL529).
XL—5th overtone, AT cut crystal style J—series resonant.

L1 C1 in the collector circuit may be replaced with a v.h.f. r.f. choke if output at crystal overtone frequency is required. No doubt, transistors other than the 2N2362 could be used, but the Philco units were available at the time. As it stands the circuit will work over the range 90 to 100 Mcs. approx. The series inductance is adjusted to give minimum r.f. voltage across the crystal, but can be detuned slightly to pull the frequency of oscillation.

The crystal used was a fifth overtone A.T. cut mounted in a miniature Style J holder (flying lead type) and the whole circuit can thus be made very compact.

—D. H. Rankin, VK3QV.

Package for Transceivers

(Continued from Page 5)

balance the series-connected heaters), so connections must be made to the heater terminals indicated.

TRANSCEIVER MODIFICATION

Constructional details of the adaptor unit depend upon the size of the c.w. filter used, and whether or not a separate loud speaker is incorporated for the c.w. monitor. The unit I built, without loud speaker, fits into a 6 x 4 x 3-inch German equivalent of a Minibox.

Connections to the NCX-3 were very simple, since B plus and filament power are already available at the 100-Kc. calibrator accessory socket on the rear apron. The only changes in the connections to this socket were to short out the 22-ohm resistor in series with the 12.6-volt filament line, and to remove the ground from Pin 6. This connection is not needed, since Pin 2 also provides a ground connection.

The coupling connection between the product detector and the audio section of the NCX-3 should be broken. The output of the detector is then brought out to Pin 1 of the accessory socket, while the input to the audio section is brought out to Pin 3. Shielded wire should be used for these connections as well as for the crystal-calibrator output lead.

Keyed bias for the side-tone oscillator and a connection to the "hot" side of the speaker circuit are available at the power plug adjacent to the calibrator plug at the rear of the NCX-3. The keying bias connection is strapped over to Pin 6 on the calibrator plug, and the speaker connection to Pin 5.

The adaptor unit will operate on any plate voltage from about 150 to approximately 220 volts. Current drain averages about 25 mA.

Although the inside of the transceiver was hardly touched, this accessory package has gone a long way towards making my NCX-3 a really complete station for use on c.w. as well as s.s.b. ●

EXTRACT FROM PROCEEDINGS I.R.E.E., AUST., MAY 1965

We need an expanding home market for advanced electronics. We are not without possibilities close at hand. The Radio Amateurs of this country are increasingly attracted to single sideband operation and the use of their higher frequency allocations. In this field, the days of home construction are all but over, and some greater effort to preserve, even extend, the Amateur's present meagre frequency allocations would no doubt throw up an increased market for advanced electronic equipment. It is a matter of demonstrable fact that Amateurs contribute significantly to Australia's competence in advanced electronics.

We do not have in Australia a citizens' band available for casual, non-licensed use. There is an unsatisfied demand for fixed and mobile services which would add significantly to the efficient operation of industry and commerce while providing work for the electronics industry. When most technically advanced countries are making increased use of f.m. for the extension and improvement of broadcasting services, we have managed not only to resist the demand for an extension of f.m. services, but to close down such experimetnal services as we had.

The time has clearly come when we must seek reform in the administration of our tele-communications and the development of a new and imaginative philosophy which will constantly seek the widest possible use of modern techniques in what the Americans have so properly described as the public "interest, necessity and convenience."

TECHNICAL ARTICLES

Readers are requested to submit articles for publication in "A.R.," in particular constructional articles, photographs of stations and gear, together with articles suitable for beginners, are required.

Manuscripts should preferably be typewritten but if handwritten please double space the writing. Drawings will be done by "A.R." staff.

Photographs will be returned if the sender's name and address is shown on the back of each photograph submitted.

Please address all articles to the
EDITOR "A.R.,"
P.O. BOX 36,
EAST MELBOURNE, C.2,
VICTORIA.

THE YL OPERATOR CLUB

The name of this fraternity has two meanings: (1) the Latin figure XL stands for 'forty,' and (2) the English pronunciation of XL is 'excel' or 'excellent.'

The membership of this fraternity is based on long-term service and excellent achievements in the fields of Amateur Radio. The 'XL' operators could claim to belong to the 'High Society' of Amateur Radio. The requirements of this fraternity are intensive activity of many years on various Amateur bands.

A minimum of 40 points is required for the membership. The points may be earned as follows:

(1) Five points for the first full 10 years the applicant has been duly licensed as transmitting Amateur, plus three points for each full five years thereafter.

(2) Five points for the first DXCC countries confirmed, plus three points for each additional 50 countries confirmed.

(3) Five points for each 100 DXCC countries confirmed on each of the 28, 21 and 14 Mcs. Amateur bands.

(4) Three points for each 50 DXCC countries confirmed on each of the 7 and 3.5 Mcs. Amateur bands.

(5) Two points for each 20 DXCC countries confirmed on each of 1.8 Mcs. and v.h.f./u.h.f. V.h.f./u.h.f. is considered as one band.

The country totals are calculated regardless of the mode of operation, so one country may be counted only once on each band. A.R.R.L. DXCC rules apply for counting the countries. However, official A.R.R.L. DXCC credit is not required.

There are no endorsements. The 'XL' Club is sponsored by the Award Hunters' Club International.

Count the points and, if you can claim at least 40, send in your application. Give the following details: Your call, your name and complete mailing address, plus (1) the date of your first transmitting licence (in case there have been interruptions, give the details); (2) the DXCC score confirmed (or credited by the A.R.R.L.); (3) the number of confirmed countries separately on each band (see the calculating table). Finally certify personally that the information given in your application is true. No other certification is necessary; we trust the word of 'XL' operators. If false information is given it will spoil the Ham spirit.

Enclose sufficient return postage (there is no membership fee), and address the application to the Award Hunters' Club International, c/o OH2YV John Velamo, Isokaari 4-B-30, Helsinki 20, Finland.

Tell your friends about the 'XL' Club. This recognition is really worth working for, and no doubt the 'XL' Amateurs will be recognised by all Amateurs as examples of successful operating and loyalty to Amateur Radio—Remember: HAM SPIRIT IS OUR GUIDE STAR.

An Indoor Pylon Slot Aerial for 145 Mc.*

WING COMMANDER A. P. MORGAN, D.F.C., R.A.F. (Ret.), G8DV

RECENTLY a requirement arose for an aerial to test some newly-constructed 2 mx equipment in a temporary location. The aerial had to be indoors, omnidirectional (to avoid the complications of rotation), cheap and simple to construct. The design adopted proved unexpectedly successful and it is thought that it may be of interest to others.

The writer is convinced that success with indoor aerials depends upon using flatly tuned designs with moderately wide band characteristics, e.g. folded dipoles, cages or cones. Past experience has been that such sharply tuned aerials as Yagis, W8JK's or inductively loaded designs are disastrously affected by the proximity of water pipes and rafters.

The design adopted is based on some notes on the "pylon slot" which appeared in "Mobile Column" for February, 1963. It consists of a 10 in. diameter metal cylinder, 60 in. in length with a 1 in. slot in the side, short-circuited at each end. This resonates just above the 2 mx band and is brought to precise resonance by loading with a small capacity connected across the centre of the slot. By making the cylinder slightly longer, the natural resonance could be brought down to the 2 mx band and the loading capacitor dispensed with. The present arrangement, however, provides a convenient means of adjustment to compensate for possible slight variations due to materials or construction.

The aerial is fed by 72 ohm semi-air spaced co-axial cable through a 4:1 balun (see "RSGB Handbook," page 396). The feed point is about 14 in. from the lower end of the slot and the feeder, with balun tied to it, is run through the centre of the cylinder. The balun section is 35 in. long (27½ in. if solid dielectric cable is used, although 26 in. may be more suitable with some solid dielectric types).

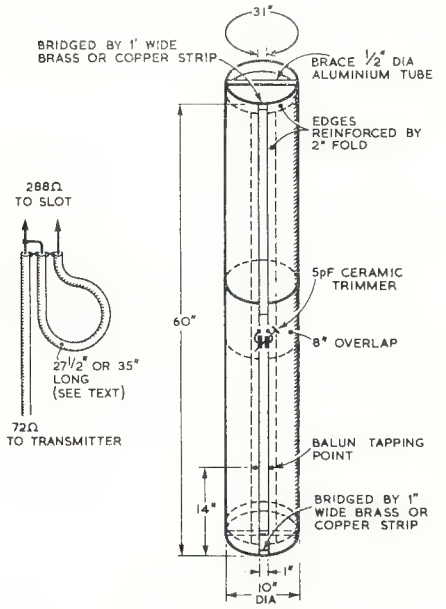

Fig. 1.—Construction of the aerial and the balun.

* Reprinted from "R.S.G.B. Bulletin," December, 1965.

CONSTRUCTION

The cylinder is made from perforated zinc sheet. Locally available supplies come in 36 in. wide rolls of which two 35 in. lengths are required. These are spot soldered together, side to side, with an 8 in. overlap. The edges of the resulting large sheet are reinforced by folding to a width of 2 in. and spot soldering. The final size of the sheet is 60 in. by 31 in. This is then bent to cylindrical shape, leaving a 1 in. slot in the periphery which is bridged, top and bottom, with 1 in. wide strips of sheet copper (or tinplate) soldered into place. Each end of the cylinder is braced with a length of ½ in. diameter aluminium tube, flattened at the ends, bent at right angles for ½ in. at each end and bolted to the cylinder walls across the diameter. A small 5 pF. ceramic trimmer is soldered across the exact centre of the slot. The finished product is not robust, but this is not important as it is for indoor use.

TUNING

The aerial is most conveniently tuned with the aid of a standing wave indicator (e.g. "R.S.G.B. Handbook," page 482). The aerial is temporarily suspended in the operating room, or stood on a chair or table. (The ends of the cylinder are at zero r.f. potential so that no high grade insulation is necessary.) The balun is attached to the slot in temporary fashion at the approximate position given above. Power at a level suitable to the s.w.r. bridge is fed to the aerial and the trimming capacitor adjusted for minimum s.w.r. The tapping point is then slightly adjusted and the capacitor retuned for minimum s.w.r. The process is repeated until minimum s.w.r. has been achieved. An s.w.r. of 1-2:1 is adequate. The balun may then be permanently connected and the aerial transferred to the attic; the change of environment should have little effect on s.w.r.

PERFORMANCE

In the limited time available to try out this aerial, its performance exceeded expectations. It radiates with horizontal polarisation and the pattern appears to be substantially omnidirectional with some gain due to vertical directivity. Although no direct comparisons have been possible, the performance appeared to be better than that of a four-element indoor Yagi formerly in use although in all fairness it must be admitted that the Yagi was much affected by nearby objects. From an average location in the loft of a typical suburban London house contacts were made with F (Brittany), ON, PA, GC, GW, during an opening and a number of more local stations in various directions using n.b.f.m. or c.w.

The cost of the perforated zinc was about 22/6; construction and alignment occupied a single wet Saturday afternoon and evening. While its performance cannot compare with that of a good outdoor beam, this aerial may be of interest to those v.h.f. aspirants suffering under a "no outside aerials" restriction or to "handraulic" beam owners who like to enjoy net working without manual labour. ●

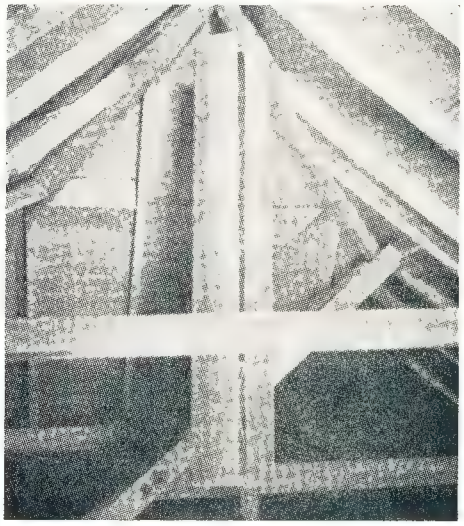

The pylon aerial mounted in the attic at G8DV.

☆

CONTEST CALENDAR

7th/8th May: U.S.S.R. DX Contest (c.w. only on 3.5 through 28 Mcs.).

15th May: N.Z.A.R.T. Sangster Shield (3.5 Mcs. only).

4th/5th June: CHC/FHC/HTH QSO Party.

9th/10th July: R.S.G.B. 1.8 Mcs. "Summer" Contest.

August: Remembrance Day Contest.

24th/25th September: R.S.G.B. 21/28 Mcs. Phone Contest.

1st/2nd October: VK/ZL/Oceania DX Contest (Phone section).

8th/9th October: VK/ZL/Oceania DX Contest (c.w. section).

SUBSCRIPTIONS DUE

All members of the W.I.A. are reminded that annual subscriptions are now due and should be paid promptly to their Divisional Secretary. Non financial members will not receive a copy of "A.R.," and back copies may not be available upon request. To preserve continuity of your files of "A.R.," please pay your annual subscription now.

F-SERIES S.S.B. EQUIPMENT

PROFESSIONAL QUALITY AT AMATEUR PRICES

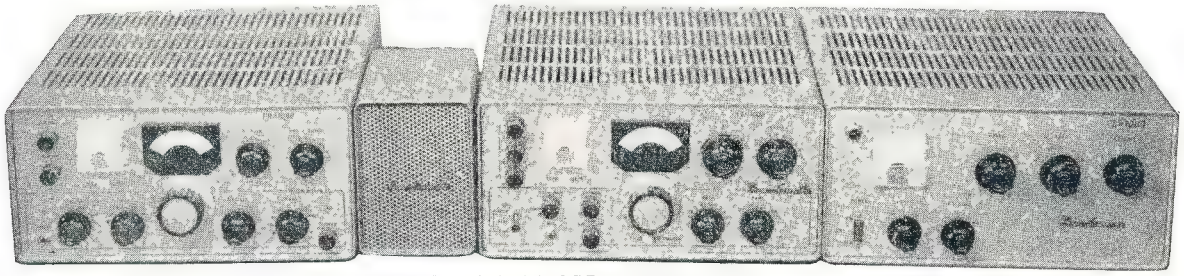

COMPACT TABLE-TOP STATION—MECHANICAL FILTER SYSTEM
FIVE BANDS — 80-10 METRES. TRANSCEIVE OR NORMAL OPERATION

FR-100B: RECEIVER, S.S.B.-A.M.-C.W., dual conversion, with crystal locked front end, two mechanical filters for best reception of s.s.b. and a.m., high reduction precision gear driven dial reads to 1 Kc. Crystal filter for c.w. A.n.l., "S" meter, a.g.c., s.s.b. clarifier, built-in monitor. Additional crystals for 100 Kc. calibrator, full 10 mx coverage, WWV and three s.w. ranges. A professional quality receiver for the Amateur or discriminating S.w.l. **£209½ ($419)** inc. S.T.

FL-200B: TRANSMITTER, S.S.B.-A.M.-C.W., 240w. p.e.p. input with two 6JS6 (similar 6DQ5) tubes in p.a. working within ratings for longer life. Solidly constructed and neatly wired, with high quality components, ceramic bandswitch, Kokusai M.F., built-in solid state power supply, antenna relay, etc. All plugs, inst. manual and p.b. microphone supplied. Nothing else to buy. Cabinets beautifully lacquered in dark driftwood wrinkle. Satin finish panel.

C.W. Men: This is a first class rig for you too—break-in operation, T9X note, clean chirpless keying, v.f.o. runs continuously. **£245 ($490)** inc. S.T.

This equipment has every facility, enabling operation on the three modes without necessity for compromise. Fully imported. Used by Australia's leading Phone DX'er.

NEW! To be available soon: FT-100 Transceiver, FL-50 Basic S.s.b. Exciter, V.f.o., L.P. Filters, etc., all made by Yaesu Musen Co., of Japan.

Brochure available from the Australian Agents:

BAIL ELECTRONIC SERVICES

60 SHANNON STREET, BOX HILL NORTH, VIC. **Phone 89-2213**

NOW AVAILABLE—

THE 1966 EDITION

★ A.R.R.L.—Radio Amateur's Handbook

The Standard Manual of Amateur Radio Communication

Price $6.10 posted, or 58/6 and postage 2/6

NOW AVAILABLE—

★ The Radio Transistor Handbook

by Stoner & Earnshaw. **Price $6.65** posted, or 64/9 and postage 1/9

THIS UP-TO-DATE HANDBOOK COVERS A WIDE RANGE OF COMMUNICATION FOR BOTH AMATEUR RADIO & COMMERCIAL APPLICATIONS

McGILL'S AUTHORISED NEWSAGENCY

Established 1860 **183-185 ELIZABETH STREET, MELBOURNE, C.1, VIC.**

"The G.P.O. is opposite" **Phones: 60-1475--6-7**

SIDEBAND

Sub-Editor: PHIL WILLIAMS, VK5NN

LINEAR AMPLIFIERS—continued.

Our April Sideband notes have dealt with the class "A" stage of the transmitter, which usually follows the last mixer which puts the signal on the final frequency. Now, the next stage to be described is the Class AB1 amplifier which lifts the signal from a "high-impedance" voltage signal at the grid, to give an r.f. power output of 50 to 100 watts, with minimum distortion.

During the past few months I have had many questions from Amateurs who have been active on a.m. and c.w. for many years and are thoroughly conversant with the operation and adjustment of Class C amplifiers of the 807 and 813 variety. It is to this group that the notes are addressed this month, as there is a need to re-orientate the thinking on amplifiers, to change over to linear operation. Such topics as plate supplies, screen supplies, bias supplies, muting, neutralisation, drive, loading, and tuning need to have their differences between the Class C and Class AB1 conditions emphasised.

If you have been brought up on s.s.b. you may drop off to sleep or turn to another page. Starting from the beginning, the first decision to be made is to choose the type of output tube required in your exciter. A good choice for British, Australian and New Zealand licensing conditions is the pair of 807's in parallel, single 6146, 6DQ6, 6DQ5, 829B (two sections in parallel), or tubes of similar rating. The important parameters to be considered, and here the valve data sheets and tables in the back of the A.R.R.L. Handbook should be consulted, are the input, output and plate-grid capacitances, and the relative voltages and bias voltages for the elements. All of the examples mentioned above will give outputs of 40-50 watts without strain, under class AB1 conditions, i.e. with no grid current. They will operate at plate voltages of about 600-800 volts. The 807s require 300 volts on the screens and about —30 volts of fixed bias, the 829 being similar but voltages are usually reduced to about two-thirds of the above, viz. 500, 200 and —22 volts of bias to avoid over-heating the envelope and gassing problems to which these valves are prone. Most television tetrodes of the 6DQ6 type require only 150 volts on the screen, but about 50 volts of grid drive. The popular 6146 may be run at 205 volts on the screen and —45 to 50 volts of bias. Most American exciters use about double the exciter power above but this is because they have to drive the 2 kw. p.e.p. linear amplifiers which they are permitted to use.

When a linear for British licensing conditions is used, viz. one giving 400 w. p.e.p. output (corresponding to approx. 600 w. peak input power) then less drive is required. By way of comparison the present a.m. plate modulated final operating at 66% efficiency, gives 400 w. p.e.p. output, i.e. on modulation peaks, so this is the reason for the British ratings.

Since peak emission from the tube's cathode is the important characteristic for determining the loading and peak output from a class AB1 amplifier, the plate current/voltage curves have been drawn in Fig. 1 for the limiting conditions only, to avoid cluttering up the graph. The 6146 (1) and 807 (2) have been drawn, as these are popular, and the difference in peak emission is quite obvious. Operating conditions for screen and grid voltages are shown on the curves. You will notice that the peak emission of 2 x 807s is just a little more than a single 6146, and the load line necessary for both of these can be considered to be about the same for the purpose of the exercise.

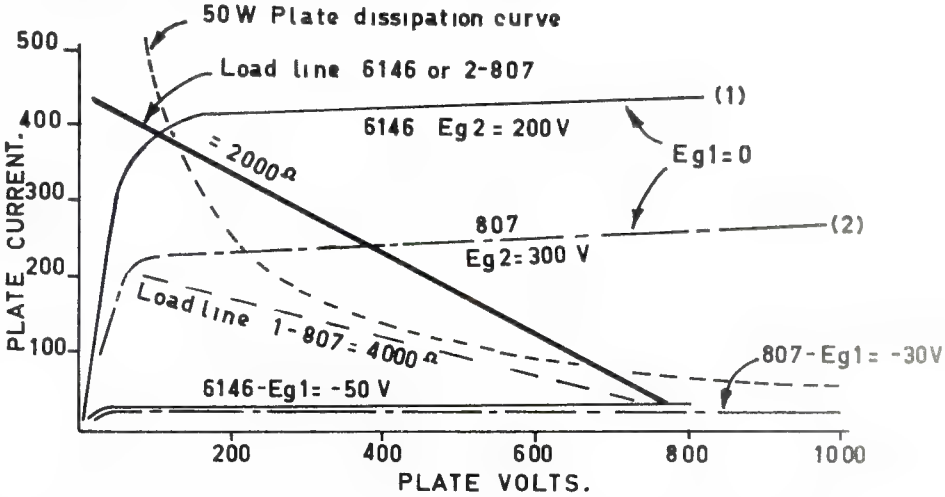

Fig. 1.—Plate current curves for Class AB1 operation.

The 2000 ohm load line shown in the curve has to be doubled when calculating the output tuned circuit constants, as the tuned circuit only loads the plate of the tube for about half of the time. Designs for pi-network plate circuits are given in all recent copies of the A.R.R.L. handbook for the usual loaded Q of 12. It is necessary to simply consult the curves to obtain the plate tuning capacitance, inductance, and loading capacitance for 50 ohm or 75 ohm output, whichever you use. The valves are given in tabular form in the Radio Handbook, 15th edition, page 267—Table 1—"Components for Pi Coupled Final Amplifiers."

The point to be noted on the higher frequency bands, is that the minimum C possible with the plate capacitance and the tuning condenser right out of mesh is usually greater than that required. It is usual to design for up to double the circuit Q, i.e. about 20 for the 10 metre band and about 15 for the 15 metre band. More circulating current in the inductance of these higher Qs requires that they be wound of heavy copper wire, preferably silver plated, for minimum losses, and that the coil switch should be first grade as far as contacts are concerned. The 10 and 15 m. coil sections are, therefore, usually heavier and perpendicular to the other coil sections so that they will not be closely coupled to the other shorted coil sections. Checking some commercial pi-network coils (not of local origin) on a Q meter produced surprising results with unloaded Qs of 70 or 80 on some bands, instead of 200 to 300 as would be expected, and the remedy was quite simple, viz. separating the sections of the coil, which is progressively shorted, by about a quarter of an inch, instead of tapping a continuous winding of 16 turns per inch.

Use of an r.f. choke to supply the plate with d.c. appears to be standard practice now, so the plate tuning condenser does not need to have more than .030 inches plate spacing. An old-style broadcast gang will do for 80, 40, and 20 metres, but its minimum capacitance and bakelite insulation (usually) are limiting factors for the higher bands, so it is a good idea to look for something with insulating end plates or, if metal, having most of the metal removed and spaced well away from the fixed plates. Ceramic or micanite insulation is preferable, and a good system of rotor grounding must be provided. There are many suitable capacitors about — ex-World War II. gear, but it pays to pick them up when you see them and "salt" one away for the project. If you have some you are not using of about 200 pF. max., 12 pF. min., then some other sideband constructor may be glad to get it. If you want to see the sort of thing recommended here, have a look in somebody's Swan or Galaxy transceiver, and the requirement will be clearer.

The A.W.A. tuning condensers ex the AT5 are more generously spaced than you require for the exciter output tuning condenser, so this type is better reserved for perhaps a linear using higher voltage, or the aerial coupling unit in

(Continued on Page 17)

LOW DRIFT CRYSTALS

FOR

AMATEUR BANDS

ACCURACY 0.01% OF STATED FREQUENCY

3.5 and 7 Mc.
Unmounted, £2/10/0
Mounted, £3/0/0

12.5 and 14 Mc.
Fundamental Crystals, "Low Drift"
Mounted only, £5.

THESE PRICES DO NOT INCLUDE SALES TAX

Spot Frequency Crystals Prices on Application.

Regrinds £1/10/0

MAXWELL HOWDEN
15 CLAREMONT CRES., CANTERBURY, E.7, VICTORIA

THE NEW "A.R."

LOG BOOK

IS NOW AVAILABLE

Larger, spiral-bound pages with more writing space.

Price 7/6 each
including Postage

Obtainable from your Divisional Secretary, or W.I.A., P.O. Box 36, East Melbourne, C.2, Victoria.

PROJECT AUSTRALIS

One of the major decisions to come out of the Federal Convention at Easter is to sponsor an Australian satellite carrying Amateur Radio.

The developmental work and construction of this equipment has been undertaken by the Melbourne University Radio Club and the Melbourne University Astronomical Society.

Preliminary tests have been made by means of balloon launchings and results so far have been highly satisfactory.

If the necessary finance is forthcoming in the next few weeks it will be possible to have the satellite launched towards the end of 1966.

Although all Divisions have signified their willingness to make a financial contribution, the cost of this project is such that assistance from individuals interested in this project would be more than welcome.

Full details of the satellite will be available well before the launching, but briefly it will carry a beacon transmitter in the 28 megacycle band, an eight-channel telemetry system operating on the 2-metre band, and a command receiver also operating in the 2-metre band, which will enable Amateurs around the world to test the command system which may be used in a translator satellite to be launched after the results of the first satellite have been analysed.

This project has great prestige value to Australian Amateurs, and every effort should be made to bring this project to successful fruition. If it is successful, and sufficient financial support obtained, the opporunity exists to arrange for the launching of a translator satellite in 1967.

All donations should be sent to the Federal Executive, P.O. Box 2611W, G.P.O., Melbourne.

V.H.F. NET FREQUENCIES

Many stations operating on net frequencies do not appear to know the requirements and procedures for net operating, if they do they appear to ignore them. The main "offences" that have been noticed are:—

(1) Hogging the channel.

(2) Ignoring "break-in" stations and/or telling the break-in stations to stand by or asking the break-in station to use another channel.

(3) Giving micro-second breaks between overs.

(4) Having rag-chews with overs up to 5-minute duration.

(5) Not listening on the frequency prior to calling or testing.

(6) Testing on a frequency whilst other stations are using the channel.

(7) Using a mode of transmission or a net frequency such that the users of the net cannot copy but suffer severe interference.

Correct procedures are:—

(1) Listen on the frequency before testing or calling.

(2) Keep overs short, not more than a couple of minutes each.

(3) Give at least 3 seconds break between overs to allow break-in stations to identify their presence.

(4) Acknowledge a break-in station and pass the net over to the break-in at the end of your over.

(5) Accurately net your transmitter and receiver to the channel that you are using.

(6) If you call CQ DX on a net frequency and make contact with a DX station tell the other station that you will QSY to X frequency and keep the net free for other operators.

(7) On f.m. no dot overdeviate. The Institute standard is plus or minus 15 Kcs.

In VK there are large number of nets in operation. Those in greatest use are: 52.526, 6 metre f.m.; 53.032, 6 metre a.m.; 145.854, 2 metre f.m., channel A; 146.000, 2 metre f.m, channel B; 146.146, 2 metre f.m., channel C.

For maximum efficiency the equipment you use should be accurately netted for receiving purposes the transmitter of VK3WI on 6 metre a.m. and 2 metre f.m. are sufficienly accurate.

For transmitter alignment it is recommended that you either net to the P.M.G. frequency measuring stations—in VK3, South Morang and St. Kilda Road (mobiles only). Some stations in Melbourne are equipped to give frequency checks on 6 a.m. and 2 f.m. These stations will be announced in VK3WI broadcasts at regular intervals.

Remember, 6 a.m. 53.032, 6 f.m. 52.525 and 2 f.m. 145.854 are primarily mobile to mobile frequencies and these stations should be given preference.

I hope this information will help some of the "offenders" to improve their equipment and operating procedures.

—Cyril Maude, VK3ZCK.

DURALUMIN, ALUMINIUM ALLOY TUBING

IDEAL FOR BEAM AERIALS AND T.V.

★ LIGHT ★ STRONG ★ NON-CORROSIVE

STOCKS NOW AVAILABLE FOR IMMEDIATE DELIVERY

ALL DIAMETERS—¼" TO 3"

Price List on Request

STOCKISTS OF SHEETS—ALL SIZES AND GAUGES

GUNNERSEN ALLEN METALS PTY. LTD.

SALMON STREET, PORT MELBOURNE, VIC.
Phone: 64-3351 (10 lines)
Telegrams: "Metals," Melb.

ADELAIDE GAM MELBOURNE

HANSON ROAD, WINGFIELD, S.A.
Phone: 45-6021 (4 lines)
Telegrams: "Metals," Adel.

W.I.A. FEDERAL CONVENTION—EASTER 1966

Some three weeks ago, over the Easter Holiday week-end, the Institute held its 30th Annual Convention in Brisbane.

In many ways it was the most successful Convention of recent times and should provide a criterion for those to be held in the future.

The majority of delegates arrived late on the Thursday evening and, after battling with the holiday exodus to the Sunshine State, were most grateful for the excellent accommodation provided.

There were over fifty agenda items (as well as items of general business) to be considered, so proceedings started early on Good Friday morning in the Board-room of the Brisbane Department of Electricity Supply.

After a welcome by Federal President Max Hull, VK3ZS, and a reply by the Queensland delegate, David Portley, VK4DP, the minutes of the 1965 Melbourne Convention were adopted.

Undoubtedly the most complex of all the agenda items — that dealing with the proposal for Federation—was the first to be tackled and in the event went through the Friday afternoon and evening and was not completed until mid-Saturday morning. The tape transcript alone occupied four reels and will provide some headaches for those responsible for the production of the minutes.

The solid work sessions continued until midday on Easter Monday when the first of the delegates had to return to his home state. Some relief to the pressure of work was provided on Easter Sunday when an afternoon motor trip to the fabulous Gold Coast was arranged by the host Division.

Federation apart, by far the most significant thing to come out of the Convention was a decision by Federal Council to support — both financially and administratively—the launching of an Australian Amateur Satellite.

Whilst technical details of "Project Australis," as it will be known, are given elsewhere in these pages, this report on Convention proceedings seeks to emphasise that the action taken by Federal Council will be of great importance to the Institute.

"Australis" will be the first Amateur satellite designed, built and financed outside the United States of America and when in orbit will serve to indicate that Australian Amateurs are as competent and progressive as any in the world.

If successful, "Australis" will be followed in early to mid-1967 by a more complex and powerful satellite.

By comparison with the exciting prospect of launching an Australian Satellite the remaining items on the agenda appeared somewhat mundane, but were nevertheless just as important to the Institute and its members.

Among the policies adopted by the Convention were two concerning Novice licensing, two concerning frequency allocations and one proposal dealing with frequency nomenclature.

Administrative matters reviewed included a uniform course of study for Amateur examinations, whilst a draft copy of a booklet designed for those newly interested in radio was presented for comment by Divisions. The format of the Institute Log Book and a proposed layout for the Call Book were also discussed.

On the international scene the subject of I.A.R.U. Region III. was deliberated at length since it was felt that Australia should take the lead in attempting to bring Region III. societies together.

Under regulatory matters delegates were advised of the present situation regarding the re-compilation of the "Handbook" and other similar matters discussed included the possible use of the 28/30 Mcs. band by L.A.O.C.P. holders, emergency networks and Advisory Committees.

The section of the agenda devoted to contests produced the usual spate of motions. Most of them dealt with suggestions for improvement of contests, especially with regard to time-keeping and scoring methods. These suggestions should find their way into contest rules in due course.

Until each State has ratified the actions of its Federal Councillor at the Brisbane Convention it will not be possible in these pages to report more fully on the detail of the various proposals. In the meantime interested members will have the opportunity at their general meetings to get more information from their Federal Councillor.

A report such as this (written in some haste to catch the publication deadline) would not be complete without a sincere "thank you" to the Host State. Since the last Federal Convention was held in Brisbane in 1936 it is additionally pleasurable to record that all the arrangements for this year's meeting were of the highest order and delegates were unanimous in their praise of the superlative job done by David Portley and his team.

The next Federal Convention will be held in Hobart at Easter 1967 and it is to be hoped that it will be as successful as the one just concluded.

The W.I.A. Federal Convention. Left to right: David Portley, VK4DP (VK4 Federal Councillor); Pat Kelly, VK4KB (VK4 Observer); Geoff Taylor, VK5TY (VK5 Federal Councillor); Roy Chamberlain, VK6RY (VK6 Federal Councillor); Ted Cruise, VK7EJ (VK7 Federal Councillor).

W.I.A. D.X.C.C.

Listed below are the highest twelve members in each section. New members and those whose totals have been amended will also be shown.

PHONE

Call	Cer. No.	C'ntries	Call	Cer. No.	C'ntries
VK5MS	24	330	VK2JZ	61	260
VK3AHO	51	322	VK4HR	12	248
VK6RU	2	313	VK2ADE	65	238
VK5AB	45	312	VK3TL	62	230
VK6MK	43	310	VK2AAK	58	214
VK4FJ	21	283	VK6KW	4	211
New Members:					
VK7SM	72	100	VK3HL	71	207
Amendment:					
VK2AGH	55	119			

C.W.

Call	Cer. No.	C'ntries	Call	Cer. No.	C'ntries
VK3KB	10	340	VK2AGH	71	286
VK3CX	26	313	VK3AHQ	79	281
VK2QL	5	308	VK2EO	2	279
VK2ADE	81	308	VK6RU	18	265
VK4FJ	29	300	VK3ARX	66	265
VK3NC	19	286	VK3XB	75	257
New Members:					
VK3HL	83	121	VK3KS	74	201
Amendment:					
VK7SM	72	194			

OPEN

Call	Cer. No.	C'ntries	Call	Cer. No.	C'ntries
VK2ADE	28	329	VK3NC	77	287
VK6RU	8	320	VK4HR	7	281
VK2AGH	83	319	VK2VN	18	276
VK6MK	74	309	VK3JA	43	271
VK4FJ	32	308	VK3TL	85	253
VK2ACX	6	300	VK2APK	82	243
Amendments:					
VK3HL	75	242	VK7SM	84	201

DF-2

FOSTER DYNAMIC MICROPHONES

FOR HAND-DESK USE

SPECIFICATIONS:

Output Impedance .... 50 ohms or 50K ohms
Effective output level .... —55 db. [0 db. = (one) 1V. Microbar]
Frequency response .... 200 to 10,000 c.p.s.

OMNI-DIRECTIONAL DYNAMIC:

SIZE: 3" x 2-1/8" x 1".
Cable: 12 ft. of P.V.C.
Switch: on-off.
Desk Stand. Clip folds for hand use.
Colour: WHITE.
Plastic Diaphragm.

Retail Price
50K ohms
£2/14/0
+ Sales Tax 4/9

A QUALITY PRODUCT OF EXCELLENT DESIGN

Marketed by **ZEPHYR PRODUCTS PTY. LTD.**

ZEPHYR

58 HIGH STREET, GLEN IRIS, S.E.6, VICTORIA Phones: 25-1300, 25-4556

Manufacturers of Radio and Electrical Equipment and Components

Agents: D. K. Northover & Co.; Neil Muller Ltd.; Homecrafts (Tas.) P/L.; Jacoby, Mitchell & Co. P/L.; T. H. Martin P/L.

NEW RELEASE! . . .

TRANSFORMERS A&R MELB. AUST.

ANTENNA MATCHING and BALANCING TRANSFORMERS

For use with Transmitting and Receiving Antenna Installations!

TOROID. BALUNS.— A Special Series Product.

Toroidal ferrite cores, fully encapsulated with epoxy resin and silica under vacuum. Suitable for use in cold to sub-tropical areas. All except 355C and 356C are provided with antenna insulator support brackets. Balun dimensions approx. 2" dia. × 1" + Socket and lugs. Weight approx. 3¼ to 4 oz. Power rating — 200 Watts or 400 Watts P.E.P.,

350A	Impedance ratio 1:1, 75 ohms unbalanced to 75 ohms balanced. 3 to 30 Mc/s. For use at centre of a dipole antenna with coaxial cable feed line or at base end with 75 ohm twin line. Coaxial connector is Belling & Lee L604/S and lug terminals.
351A	Impedance ratio 1:4. 75 ohms unbalanced to 300 ohms balanced. 3 to 30 Mc/s. For use at centre of a folded dipole antenna with coaxial feed line or at base end with 300 ohm twin line connector and terminals as 350A.
352A/BC	Details as 350A except freq. range 500 Kc/s to 5 Mc/s, or to 30 Mc/s, for receiving purposes only with increased attenuation.
353B	This is a type 350 with a coaxial socket SO 239 (Amphenol screw type).
354B	Type 351 with SO 239 coaxial socket.
355C	Impedance ratio 2·1:1 52 ohms unbalanced to 25 ohms unbalanced. 3 to 30 Mc/s. For use at the base of a mobile whip antenna, coupled to fixed or adjustable transmitter output impedance. Lug terminals.
356C	Impedance ratio 3·1:1. 78 ohms unbalanced to 25 ohms unbalanced. 3 to 30 Mc/s. Lug terminals. Use as 355C.

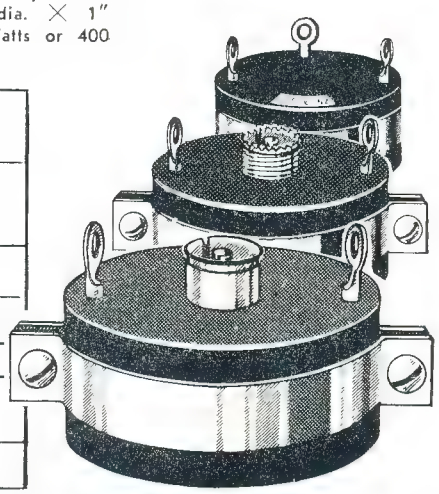

For further details see your nearest A & R Stockist!

A & R TRANSFORMERS PTY. LTD., 46 Lexton Road, Box Hill, Vic. **Phone 89-0238**

Transistor Interchangeability List

The 8th revised edition tabulates in excess of 2,350 transistor types in the first part of the publication while the latter features the "Broadcast Receiver Transistor Replacement Guide" (approximately 1,000 transistor listings). This section is compiled to provide service organisations with a ready reference of transistors in the Mullard range which are suitable replacements for Japanese and other imported transistors.

This 8th edition of the "Transistor Interchangeability List" is available from all Mullard Offices throughout the Commonwealth, priced at 25c, post free.

☆

HINTS AND KINKS

FEEDER SPACERS

Ever wanted a cheap and effective insulating spacer for open wire feeders or folded dipole antennae? Remove the braid and insulation from scrap lengths of UR57 or similar co-axial cable. Remove the inner conductor (this will need to be done in short lengths of no more than a foot, or it will be difficult to remove). Cut to the desired length, leaving about ⅜ inch at each end, then drill holes at the required spacing of a size to make a firm fit over the wire. With a little ingenuity a jig can be made up for mass production.

The spacers are very effective up to a length of 2½ inches or so. They will work at greater spacing, but lack rigidity.

—A. H. F. Nickols, VK4AL.

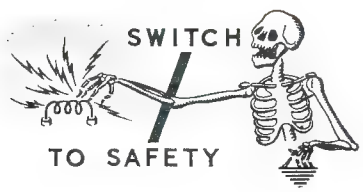

SIDEBAND

(Continued from Page 13)

which very high r.f. voltages can occur at moderate power levels. Don't throw these big fellows away, as they are becoming collectors' items and can cost lots of dollars for new ones.

Now here is a note on the selection of the plate feed r.f. choke. I have seen transmitters operating quite satisfactorily with the small 4-pi, 2.5 millhenry chokes, but in other transmitters, even the expensive heavier duty low resistance jobs costing many dollars have lasted 10 or 15 seconds on some bands. I recommend the long solenoid type, wound on ⅝" or ¾" dia. bakelite, or better still, ceramic tubing.

The loading capacitor may be a series of fixed mica capacitors, switched by the bandswitch, or a good large 3-gang tuning condenser with ceramic insulation.

Plate blocking condensers of the 2000 volt working variety, and about .002 microfarads are available in either the mica or hi-k ceramic type, my preference being for the mica one, having seen the others fail. Use the highest voltage rating you can buy.

Brass or copper strip connections in the r.f. circuits will pay off in reducing the inductance of the connections —which should not have it.

Plate parasitic suppressors are usually 5 to 10 turns of 18 g. wire wound on 1 watt, 47 ohm "Erie" resistors. These "Erie" composition-type resistors with white ceramic cases about ¾" long and just under ¼" dia. appear to outlast and out-perform the bakelite moulded ones in this service.

The last item for shopping is a 2 to 10 pF. neutralising condenser—ceramic insulation, adequate spacing between plates—suitable for mounting away from earthed metal and adjustment without danger to the operator, with an insulating extension or non-metallic tool.

Next month's notes will deal with the setting to work of the output stage of the exciter. Following that I hope to slip in a few notes on crystal filters before proceeding with notes on the larger linear amplifiers.

73, Phil VK5NN.

☆

NEW CALL SIGNS

JANUARY AND FEBRUARY, 1966

VK1GP—G. P. Butler, Flat 12, Block "B," Currong Flats, Braddon.
VK1TO—R. K. Westbrook, 9 Haines Street, Curtin.
VK2EM—E. J. Mulholland, Married Quarter 43, Middle Head Military Area, Mosman.
VK2OC—T. J. Casey, 54 Memorial Avenue, St. Ives.
VK2QS—M. S. Stephenson, 4/12 Watson Street, Neutral Bay.
VK2TO—T. Olrog, 1/28 Somerset Street, Mosman.
VK2AEZ—E. A. Marstella, 34 Gallipoli Street, Lidcombe.
VK2AOB—V. F. Burman, 25 Woronora Parade, Oatley.
VK2AXG—Kiama High School Radio Club, High School, Kiama.
VK2AYO—R. B. Broad, 3/7 Bogota Road, Cremorne.
VK2AZQ—A. Havyett, 9/12 Hazelbank Road, Wollstonecraft.
VK2BBE—J. L. Byrnand, Postal: C/o A.N.Z. Bank, corner Hunter and Pitt Streets, Sydney; Station: Portable throughout N.S.W., Qld. and Vic.
VK2BBO—E. L. Andrews, Postal: P.O. Box 45, Goulburn; Station: 56 Annetts Parade, Mossy Point.
VK2BGF—G. Hunziker, 26 Chatham Avenue, Taree.
VK2BGH—G. L. Heyes, 12 Victory Street, Clovelly.
VK2BLF—L. B. Fisher, Flat 83, 143 Kurraba Road, Neutral Bay.
VK2BOB—R. A. Blyth, 28 Park Street, Belmont North.
VK2ZBZ—J. C. Rogers, 89 Barney Street, Armidale.
VK2ZDU—K. J. Duncanson, 21 Brighton Parade, Brighton-le-Sands.
VK2ZEE—J. C. Wolfson, Postal: 60 Cairo St., Cammeray; Station: North Sydney Technical College.
VK2ZFR—D. K. King, 14 Cambridge Avenue, Raymond Terrace.
VK2ZHT—H. E. Jones, 48 Karril Avenue, Beecroft.
VK3TU—T. J. McConnell, 5 Flinders Street, Mitcham.
VK3XA—D. V. Hope, 18 Waimarie Drive, Mt. Waverley.
VK3AEN—J. P. T. Mantle, 1 Bannerman Street, Bendigo.
VK3AEX—D. A. Morgan, 12 Lynwood Avenue, East Ringwood.
VK3AFF—C. N. Swain, 29 Constance Crescent, Hawthorn.
VK3AGP—A. P. Harding, 18 Ellison Street, Ringwood.
VK3AGQ—R. F. Gething, 388 Waterdale Road, West Heidelberg.
VK3AJM—J. C. Meyland, 5 Gayer Avenue, Wangaratta.
VK3ALN—A. S. W. Taylor, 65A Nelson Street, Nhill.
VK3ANZ—A. I. Yule, 74 Cumberland Road, Pascoe Vale.
VK3ASQ—R. E. Glew, 9 Dudley Avenue, Moorabbin.
VK3AXE—R. J. Callender, 383 Warrigal Road, Burwood.
VK3ZAC—R. L. Bennell, 26 Budge Street, Noble Park.
VK3ZIB—I. C. Baxter, 502 Ryrie Street, Geelong.
VK3ZQD—K. J. O'Brien, 52 Summit Road, Frankston.
VK3ZQF—B. M. Thomas, Hoddle Street, Yarra Junction.
VK3ZSB—E. R. Gray, 95 Atherton Road, Oakleigh.
VK3ZSM—M. S. Odell, 42 Kooyong Road, Caulfield.
VK3ZSN—G. R. Howard, Upper Glen Park Road, Eltham North.
VK3ZTO—J. T. Bayley, 9 Dominic Street, East Camberwell.
VK4VU—J. H. Dexter, 10 Allden Street, Southport.
VK4YJ—G. W. Jane, 18 Rose Street, North Ward Townsville.
VK4YX—W. W. Watson, 66 Brae Street, Rockhampton.
VK4ZGJ—G. J. Richardson, 17 Dagmar Street, Rockhampton.
VK4ZJO—J. Harvey, 38 Cambridge Street, Camp Hill.
VK5HP—J. H. Lehmann, "Glenburnie," Mount Gambier.
VK5NM—N. A. Marnie, 11 Sussex Street, Hamilton Park.
VK5ST—K. A. Potter, 26 Gowrie Avenue, Glengowrie.
VK5ZCD—D. L. Cordes, 37 Sullivan Road, Elizabeth Park.
VK5ZFD—C. M. Deane, 9 Shearing Avenue, Oaklands Park.
VK5ZHC—T. C. Corbin, 12 Fuller Street, Walkerville.
VK5ZSW—R. H. Whellum, 46 Tyne Avenue, Kilburn.
VK5ZTF—T. L. Folds, 10 Trott Grove, Oaklands Park.
VK6IR—J. D. Van Lear, Postal: Box E270, G.P.O., Perth; Station: 52 Ednah Street, Como.
VK6ZBC—G. J. O. Coles, Postal: Box 75, P.O., Donnybrook; Station: South West Highway, Donnybrook.
VK7ZGJ—J. E. Gelston, 144 King Street, Westbury.
VK7ZLH—R. L. Hibbert, 647 Huon Road, Ferntree.
VK7ZSD—R. M. McClennan, 103 King Street, Scottsdale.
VK7ZRT—R. D. Summers, 365 St. Leonard Road, St. Leonards.

AMATEUR FREQUENCIES:

ONLY THE STRONG GO ON—SO SHOULD A LOT MORE AMATEURS!

ROSS HULL MEMORIAL CONTEST 1965-66 RESULTS

The Federal Contest Committee takes pleasure in presenting the Results of the 1965/66 Ross Hull Memorial Contest.

This year's total number of entries, plus the low scores, is the lowest for a long time in Contest history. From the logs received it appears that band openings were very few, and not those anticipated. It was obvious that Channel "0" also restricted operating.

Of considerable interest was the openings to New Zealand, of the 2 metre band. These took place mainly during the period of 0700 hrs. to 1000 hrs. G.M.T., between ZL and VK2 and VK3.

From remarks and comments (from VK1VP, VK2ZFB, VK3ZDM, VK4ZLO, VK5ZF, VK5ZDX, VK5ZKV, VK5ZHF, and ZL3AAU) it appears that all is not well with the Rules of the last Contest.

We would like to point out that they are what they are, because of changes recommended by members, and agenda items from conventions. However, while participants submit comments with their logs, every endeavour will be made to make use of them to form better rules.

Some comments on suggestions and criticisms are:—

(1) G.M.T. is Institute policy, and will be used in all further Contests unless it is revoked at Convention level.

(2) Calendar day must necessarily mean G.M.T. Calendar day. The next contest will start at 0001 hrs. G.M.T. to avoid confusion, and a calendar day from that time will be mentioned in the Rules.

(3) The 9-day period was generally accepted, although this received adverse criticism, I quote "being rather stupid, as it depends on band openings, and they were mighty poor in VK this year."

(4) The scoring system, with particular emphasis on the conditions of propagation of 432 and 144 Mcs. was noted, and also the high points mileage table needs reviewing.

It is anticipated that the Contest for 1966/67 will have advance publicity giving some rule changes. These should mainly be in connection with the period of the Contest, and the scoring table. It is proposed to increase the points for the 432 Mc. band and higher, to encourage more use of them.

This Contest is a Memorial to Ross Hull who saw future uses "of the world above 50 Mc." His work enabled others to find this world, and it is with this in mind that the Contest Committee would like to see a greater number of operators using the v.h.f./u.h.f. bands and entering the Contests.

—Neil Penfold, for F.C.C.

TROPHY WINNER

	9-day period	48-hour period
VK3ZDM—R. J. Beames	936	291

AWARD WINNERS

Section A—Transmitting Open

VK5ZF—I. L. O'Donnell	41	18

Section B—Transmitting Phone

VK1VP—E. Penikis	193	193
VK2ZFB—A. F. Birch	252	95
VK3ZDM—R. J. Beames	936	291
VK4ZLP—P. J. Lindsay	99	57
VK5ZKR—C. H. Hutchesson	413	—
VK6ZAL—I. G. Stimson	55	30
VK7ZAH—K. J. Hendricks	478	248
VK8ZMR—M. D'Arcy Richardson	10	10
ZL3AAD—G. E. Alderson	337	227

Section C—Receiving

L3229—R. J. Halligan	275	

TWO-DAY HIGHEST SCORING LOG

VK7RL—R. V. Bulman	443	334

Other Entrants' Scores

Section A—Nil

Section B

VK4ZRG—Townsville	66	32
VK4ZLO—Dorrington	45	27
VK5ZKV/5—S. Hummocks	193	142
VK5ZDX—Oaklinds Park	95	57
VK5ZHJ—Gawler Rail	85	27
VK5ZEJ—Forreston	81	32
VK5TN—Kings Park	20	10
VK6MM—Nedlands	19	18
VK6ZAG—Tuart Hill	12	7
VK7ZAP—Hobart	202	114
VK7KS—Sandy Bay	8	8
ZL3AAU—Christchurch	221	127
ZL3RK—Christchurch	137	110

Section C

L2074—Kingsgrove	70
L6028—Rivervale	53
L5065—Croydon	45

NOW... PRINTED CIRCUITS TO YOUR OWN DESIGN!

Do you design your own circuits? All the advantages of printed circuits can be yours at modest cost. For many years Precision Windings have supplied printed circuits to Australian industry . . . and now streamlining of production techniques permits the economical manufacture of small quantities . . . even single circuit boards. You design and supply the artwork . . . we do the rest. Precision workmanship is guaranteed and delivery made **within 7 days.**

FREE!! As many enthusiasts will not be familiar with the preparation of "artwork", send a stamped, addressed envelope to us and we will forward a set of notes written to simplify preparation of "artwork". Instructions are clear and concise.

POST THIS COUPON NOW!

Please manufacture for me the printed circuits specified herewith in accordance with the artwork supplied.

Number required..... ..... Scale of artwork.. ...

Size..... Area..... D/N..... ....

Phenolic paper circuits @ 5c per sq. in.	$
Epoxy paper circuits @ 8c per sq. in.	$
Epoxy glass circuits @ 10c per sq. in.	$
Holes drilled @ 5 for 1c (.2c ea.)	$
Cost of photonegative (fixed cost)	$3.00
Sales Tax (12½% or 25%)	$
Packing and registered postage	$0.50
Total	$

Please find cheque/money order/postal notes for total of $.....c..... (All cheques and money orders should be made payable to Precision Windings.)

NAME ..... (BLOCK LETTERS)

ADDRESS. ....

STATE ..... OCCUPATION

PRECISION WINDINGS

52 CAMBRO RD., CLAYTON, VIC. TEL. 546 7820

CHOOSE THE BEST—IT COSTS NO MORE

OTL

RESIN CORE SOLDERS

for reliable connections

O. T. LEMPRIERE & CO. LIMITED. Head Office: 27-41 Bowden Street, Alexandria, N.S.W.

and at Melbourne • Brisbane • Adelaide • Perth

Amateurs and their equipment at VK3 South Western Zone Convention at Warrnambool. Block courtesy "The Standard."

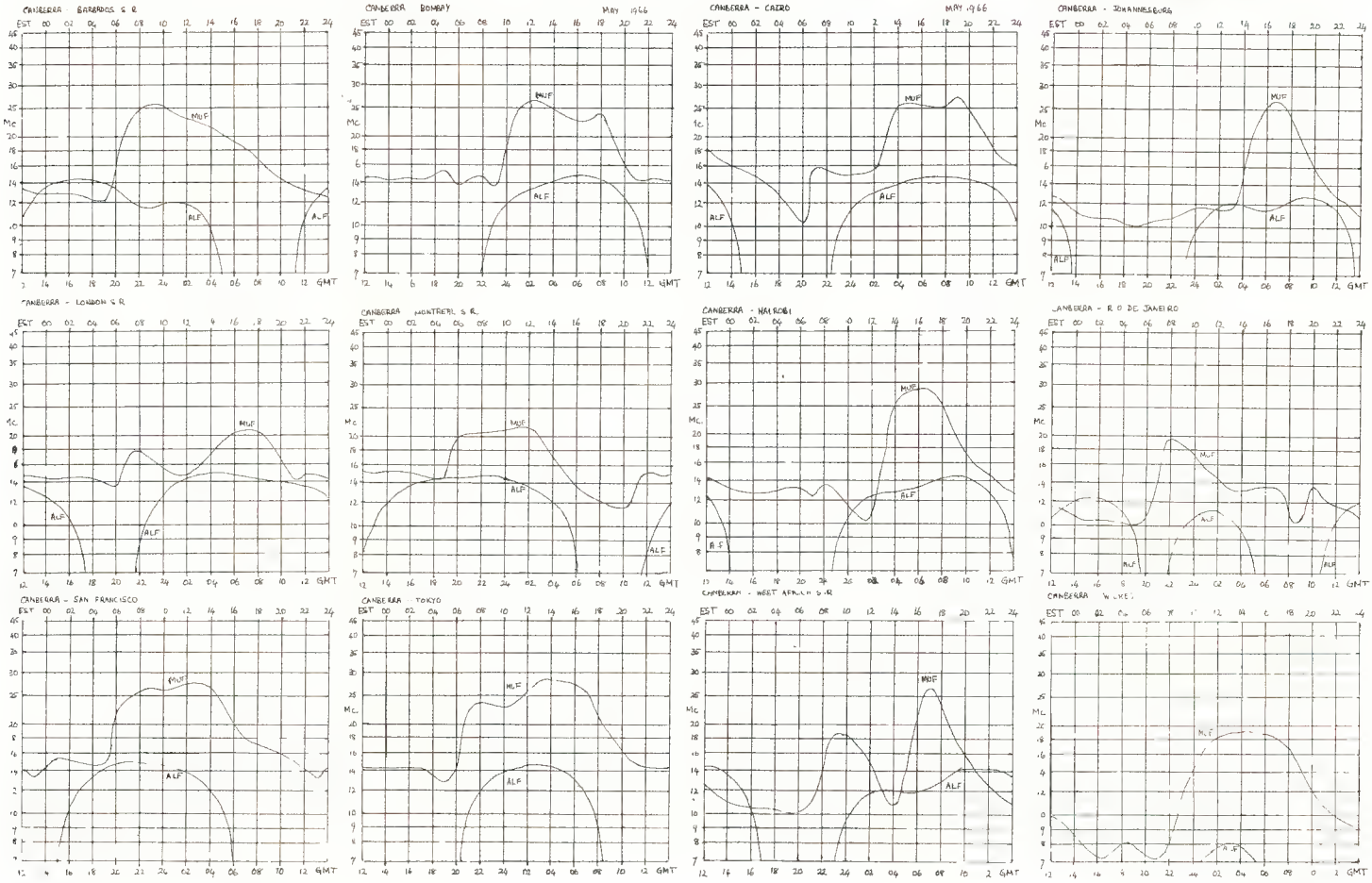

DISPOSAL BARGAINS

AT OUR BULK DISPOSAL STORE

8 PARK STREET, GLENFERRIE, VIC.

(OFF GLENFERRIE ROAD)

Phone 81-1935 (Mon. to Fri., 10 a.m. to 5 p.m.; Sat., 10 a.m. to 12.30 p.m.)

NEW VALVES

1A3	50c	5U4GB	$1.45	6CM5	$2.25	7C7	50c	830B	$1.50
1A5	50c	5V4G	$1.75	6CW4	$3.00	7E6	50c	832A	$6.00
1A7GT	$2.60	5Y3	$1.38	6F8	50c	7L7	75c	866	$2.50
1C7	50c	5Y4	75c	6G6	75c	7N7	75c	954	50c
1D4	75c	5Z3	$1.75	6G8G	$2.60	7W7	50c	955	50c
1D8	75c	6A3	75c	6H6 Metal	50c	12A6	50c	956	50c
1F5	$1.00	6A6	75c	6J5GT	$1.00	12AH7	50c	958A	50c
1H5	75c	6AB7	$1.00	6J6	$1.00	12AT7	75c	1616	$1.50
1K5	50c	6AC7	75c	6K6	$1.00	12AU7	$1.50	1625	50c
1K7	50c	6AG5	50c	6K7	50c	12AU7A	$1.50	1626	50c
1L4	50c	6AG7	$1.25	6K8GT	$1.25	12AV6	75c	1629	50c
1L5	$1.00	6AJ5	75c	6K8 Metal	$2.00	12BE6	75c	5636	75c
1LN5	50c	6AK5	$1.50	6L7	50c	12C8	50c	5763	$2.80
1M4	50c	6AL5	$1.40	6N7	50c	12J5	50c	5819 Vidicon	$10
1M5	50c	6AM5	$1.50	6R7	75c	12SA7GT	$1.00	6021	$1.00
1P5	50c	6AM6	$1.00	6S5	75c	12SC7	50c	9004	50c
1Q5	50c	6AN7A	$1.65	6SA7	75c	12SG7	75c	EA50	40c
1R5	$1.90	6AR7GT	$2.10	6SC7	75c	12SK7	50c	ECC35	$2.00
1S2	$1.75	6AS7GT	$2.00	6SF5	75c	12SN7	75c	ECH33	$2.00
1S5	$1.60	6AU6	$1.45	6SF7	75c	12SQ7	50c	ECH35	75c
1T4	$1.00	6AU8A	$2.40	6SH7	50c	12SR7	50c	EF86	$1.85
1U4	$1.60	6AV6	$1.40	6SJ7	$1.25	16A5	$1.70	EY91	50c
1U5	$1.60	6B6	75c	6SK7GT	$2.00	16A8	$2.10	KT66	$3.00
2A5	75c	6BA6	$1.55	6SL7GT	$1.25	25L6	$1.00	QQE03/12	$4.75
2A7	75c	6BE6	$1.55	6SN7GT	$1.00	25Z6	$1.00	QVE04/7	$2.50
2D21	$1.20	6BL8	$1.80	6SQ7GT	$2.60	35L6GT	$1.00	RL18	75c
2E26	$2.50	6BM8	$1.85	6SS7	75c	19	50c	UL41	$1.00
2X2	50c	6BQ5	$1.70	6U5	$1.85	30	50c	VR102	50c
3A4	$2.20	6BR5	$1.45	6U7	75c	47	50c	VR135	50c
3A5	$1.00	6BX6	$1.45	6U8	$1.70	57	50c	VR136	50c
3Q5	$1.00	6BY7	$1.45	6V4	$1.14	58	50c	VR137	50c
3S4	$1.00	6BZ6	$1.60	6V6GT	$1.75	80	$1.70	VR150	$1.25
3V4	$1.50	6C6	50c	6X4	$1.00	717A	75c	VT78 (6D6)	50c
5AR4	$2.60	6C8	$1.00	6X5	$1.45	807	$3.75	VT127	50c
5AS4	$1.45								
5R4GY	$3.75	6CG7	$1.55	7A8	40c	808	$1.00	VT501	75c
5T4	$1.75	6CH6	$2.35	7C5	50c	809	$2.00	VU39A	50c

VALVE SOCKETS

832A Sockets	20/–	each
4/25A ,,	20/–	,,
Acorn ,,	3/6	,,
Loctal ,,	2/–	,,
EF50 ,,	2/6	,,
VCR97 ,,	10/–	,,
805 ,,	12/6	,,
EA50 ,,	2/6	,,
5-pin ,,	2/6	,,
6-pin ,,	2/6	,,
7-pin ,,	2/6	,,
7-pin P.T.F.E. Sockets	5/–	,,
Locktal P.T.F.E. Sockets	5/–	,,
Special completely shielded 7-pin P.T.F.E. socket and shield	10/–	pair

TOGGLE SWITCHES

S.P.S.T.	5/–	each
D.P.D.T.	10/–	,,

CONDENSERS

Metal Pack, E/1 P/tail

1	μF.	350	volt
0.25	,,	350	,,
0.1	,,	100	,,
0.1	,,	500	,,
0.05	,,	350	,,
0.01	,,	1000	,,
0.005	,,	1000	,,
0.002	,,	1000	,,
0.001	,,	1000	,,

Price all 1/- each or in packs of 10 for 8/6

CHOKES

7-5 H. 125 mA.	30/–	each
8 H. 300 mA.	50/–	,,
14H. 60 mA.	12/6	,,

CHANNEL LOCK PLIERS

Type 337W	20/–	each
Type 356 End Cutters	20/–	,,

PLUGS AND SOCKETS

Octal Plug	3/6	each
Octal Socket	1/6	,,
5-pin Speaker Plugs	2/6	,,
4-pin Speaker Plugs and Sockets	1/9	,,
6-pin Jones Plugs and Socket	7/6	
Pye Plugs	2/-	each
Pye double bulk Chassis Sockets	2/6	,,

MODULATION AND DRIVER TRANSFORMERS

Modulation Transformer, 15 watts, pair of 6AQ5 to 2E26 valve.

Also Driver Transformer, single ended primary to push-pull grids of 6AQ5s. £2 the lot, or mod. Trans. 30/-, and Driver Trans. 10/-.

POTENTIOMETERS

Wire wound, 1 inch diameter.

Sizes available:—

5 ohms, 10 ohms, 25 ohms, 50 ohms, 100 ohms, 250 ohms, 500 ohms, 1000 ohms, 2000 ohms, 10K ohms, 50K ohms. 4/- each.

SPECIAL BARGAINS

P.M.G. Strip Boards, containing 24 Jacks	30/-	each
P.M.G. Strip Boards, containing 48 Jacks	50/-	each
Head Phone Cords, new	4/6	pair
3-pin Plug and two yds. Cord	4/6	
Mixed bags of Resistors (50)	12/6	
P/M Fuse Holders	4/6	each
72 ohm Co-ax Cable, 35 ft. lengths, 3/16 inch diameter	10/-	
72 ohm Co-ax Cable, 27 yd. lengths, 3/16 inch diameter	20/-	
Vibrators, 122 Type	20/-	each
122 Aerial Packs	60/-	each
12-core Cable with Plug, 22 yards long	50/-	
Wrecked 733D Receivers, less valves	40/-	
Dural Tubing, 12 ft. lengths, ¾ inch diameter	3 for £1	
Radiogram Chassis, new, completely wired, less valves and speaker,	30/-	
P.M.G. Key Switches	7/6	each

HAM RADIO SUPPLIERS

Phone 81-1935 Established 1947

DX

Sub-Editor: ALAN SHAWSMITH, VK4SS
35 Whynot St., West End, Brisbane, Qld.

It is surprising to hear, during Contest weekends, signals coming through on all bands, when on normal days these frequencies appear lifeless. This can only mean that it is lack of activity rather than poor conditions that make the bands seem quiet.

However, conditions have improved considerably over what they were last season and promise to be even better, so if you are QRT, try a comeback as many new prefixes are there for the taking.

NOTES AND NEWS

Sudan: Jim ST2BSS (ex-5N2JWC) showed on 14,239 at 2100z listening 5 up and down.

Jordan: JY2WF reported active by Smitty 601AU, who also says that he is going to sign /JY for a month around September.

Bonin Island: KG6IG John, 14,245 at 0100z. QSL to W3KTY.

Sao Thome: CR5SP Al, 14,100, 14,198 listening up. QSL W2CHK, Box 7388.

Swan Island: KH6BCB/KS4 Jim, on 14,207 at 00z and 14,040 c.w. at 21-2200z. QSL via Box 1148, Miami, Fla. 33148. Jim says that KS4CA is active on all bands and that his QSLs are handled by WA9OVE.

Grand Cayman: ZF1AA on 14,207 at 2000z. QSL via VE6TF.

FB8WW QSLs.—K2MGE handles only s.s.b. cards. C.w. requests go to 5R8BC.

Desroches: This DXpedition by Harvey VQ9HB will wait until a clear weather forecast for at least 7 running days is obtained. G8KS (not RSGB) will handle the cards when it does come off. SASE or SAE and IRCs—G.M.T. and contributions appreciated. Frequencies to watch are 14,085 c.w. and 14,100-110 s.s.b.

Liechtenstein: Oscar HB0AFM plans a 3-day stay from May 7. (VK3ARX)

Aland Island: OH0AA worked on 21,372 at 1700 by W2GKZ.

Cyprus: ZC4RM on 21,369 a.m. phone at 1500z. QSL to G3EMY. ZC4GB on 21,065 about same time. QSLs to Box 216, Farmagusta, Cyprus.
(The above by courtesy of LIDXA.)

Svalbard: LA4FG, 14,038 and 14,244 around 1200z.

Jan Mayen: LA3P/P 14,025 and LA8FG/P 3542 and 14,275 s.s.b. from 1300z and other times.

Albania: Latest call reported heard from here is ZA2BA, 14,065, 1800z. Phoney or authentic?

Bechuanaland: ZS9G said to be active Saturdays, 21,220, 1200z. This country will soon be known as Batawna.
(The above by courtesy of Fla DX'er.)

Kuwait: 9K2AD on 7 Mcs. nightly from 1600z. Near low end, also on 20 arolund 0900z. Try listening 14,080.

French Somaliland: FL8RA, FL8MC and one or two others still pound in after 1300z. Mostly 20 c.w. but some s.s.b. operation around 14,120 and occasionally one is heard on 7 Mcs. around 1900z.

Thailand: HS1CW has opened up from here. Was worked on 14,040 at 000z but said to be using other bands and modes. QSL to W1BVF.

Kamaran Island: This operation by VS9KRV is now QRT but more activity is promised later. QSL RSGB is O.K.

Lebanon: OD5EJ, OD5EK both on QRV on 7007 approx. now and easy to work. Also OD5LX shows up at odd times. QSLs for OD5EJ are via SM5AIO.

Tristan da Cunha: ZD9BE on low end on 20 m. Worked at 1700z.

Somali Rep.: 6O6BW is a fairly regular operator on 7009 approx. Workable around 1900z and QSL to W4HKJ.

Yasme: DXpeditioners Iris and Lloyd are at present in their home state W6 land They hope to set out for Europe where operations from GC and GD are on the list.

Don, W9WNV: Preparing now to operate from Minerva Reef. Season now too late to make it to Heard Is. This one will have to wait till next year.

Johnston Island: KJ6CF, 14 s.s.b. 0500z. Club station and fairly active. (Tks. Chas L4018).

Prince Patrick Is.: VE8MC operating c.w./s.s.b. 14 Mcs. around 0700z. (Tks. VK4UC.)

Ivory Coast: TU2BD Gilbert is active 14,203 Kcs. around 2200z. (G3UGT)

Veron reports that ARRL accepted DJ2KS/PY0 for credit for DXCC.

ACTIVITIES

Dud VK4MY still logging them as conditions permit. This past week or two he QSO'd on 14 c.w. UT5YP, VU2UV, LZ1AG, VS6FQ, F2GL, YO3QD, LU5OI, KP4BFF, HB9AGO, YU1MV, KX6DZ, CX2AJ, EP3AM and more. All 0600 and later.

Chas. VK4UC about to work his 100th country for DXCC 20 mx reports bands only fair. He lists these on 20 c.w.: KP4BFF, UA0IE, UC2AW, FB8ZZ, HA6VK, HM1DK, UJ8AB, CR9AH, GW3AQV, 9M8RS, UY5MV, LA1K, VE8MC, BV1USA, XW8BM, KA9MF, 5R8AL, 5Z4JX, KR8CV, UI8LB, UD6BD, KX6SZ, ON4XG, GI4RY, SP6ALL, KC4AAD, XE1KKV, UO5DN, JT1AD, HK4PP, OZ1LO, etc. Mostly worked around 0600 and 1300z.

Ken VK3TL also reports the bands as being below par. However, the following good ones were landed: 14 Mc., both modes, CP6FR, FS7RT, I0FGM, IS1GF, IS1TDW, I1CXT/IS1, OA6BE/8, UO5RO, VP5RB, VP9CP, VS9KRV (Kamaran), ZB2AK, ZB2AM, ZB2AJ, ZC4CI. QSLs received were 9Q5YL, KG4AA, ON5AZ/LX, CE6EZ, DU0DM, TG8RA, JT2AA, MP4DBP, YN4CN, DU4PR, VS9AAS, VP9FK.

Peter VK4PJ very active on s.s.b. and working some good ones. KJ6CF, PY2SL, UA1KEO, VK0AH, VA9ARU, UW9YA, 5N2AAE, OZ3FF, DJ7ZG, HL9US, OA4SG, UP2KNP, XW8BM, VP7DI, 9Q5TB, EA7ID, YV5BPS, OA4U, OK1AGC and more. Mostly worked around 2100 and between 0900 and 1300z.

SUMMARY

While in no way trying to cut the wood from under the present DXCC Totem Pole set-up, would not this competition of DX become more equitable for all, if the affair was divided into say, 5-year segments? With everyone on scratch much more incentive will be provided for the beginners in DX-ing. The O.T.'s will have the chance to prove what they did previously was no fluke. The present DXCC status system comes in for a lot of criticism, and rightly so, inasmuch as beginners have to battle through poor conditions while those on the ladder had the advantage of better sunspot activity. Think about this objectively, chaps.

My thanks to the contributors mentioned above for their valuable help.

73, DX, Al VK4SS.

WORLD RADIO PROPAGATION STUDY ASSOCIATION

On January 27, 1966, at 0100 G.M.T., the 38-foot Ketch Marinero sailed from Wallis Island en route to Western and American Samoa. Aboard were five individuals, including Chuck Swain K7LMU, and Ted Thorpe ZL2AWJ, who had just completed a successful operation as FW8ZZ on Wallis Island, the 15th such operation during the World Radio Propagation Study Association's 1965-1966 S.E. Asia-Pacific DX-pedition. The DXpedition has been received with enthusiasm by the DX fellows in the U.S.A. and throughout every country of the world in which DX'ers were to be found. During the preceding six months, over 75,000 QSOs had been logged on c.w. and s.s.b. Chuck Swain and Ted Thorpe, who had done a great part to make all this possible, were returning from the Wallis Island trip; Ted was to return to New Zealand and Chuck was to again join Don Miller in American Samoa and the DX-pedition was to continue for another two months, during which time operations were planned from Manihiki (ZK1), Heard Island (VK0), two small islands in the South Pacific which were to be counted as new countries by ARRL and possibly others.

On 29th and 30th January a full-blown hurricane struck the Wallis Island-Samoa area, the eye of the storm passing directly over Wallis Island with winds in excess of 100 miles per hour and waves 50 feet to 75 feet in height. The Maninero, with Chuck and Ted aboard, never reached port. It was caught by the hurricane just a few miles from Apia, Western Samoa. In the vast air and sea search that followed, in which the U.S. Coast Guard, U.S. Air Force and the Royal New Zealand Air Force participated, no trace of the ketch or its debris was found. During the storm, a 100-ton Korean fishing boat of wood and steel was completely destroyed with only two survivors out of 22 aboard. The Marinero is now assumed to have sunk and the five on board, including Chuck and Ted, dead.

It is hoped that every DX'er will give some consideration to just how much these two have contributed to DX to make it a more enjoyable hobby for all DX'ers. For those of us who knew Chuck and Ted personally, there were no two finer individuals on earth who were so devoted and risked so much, so that many throughout the world could enjoy many happy hours of DX-ing.

Despite this heart-breaking experience, we have decided to continue the DX-pedition, at least to attempt to complete our original plans in the South Pacific, plus Heard Island. Although the DX-pedition is now hopelessly in the hole financially, we will do all that we can to complete our plans. We hope that in the years to come, all DX'ers will, like Chuck and Ted, think about what they can do to make DX-ing a better hobby, particularly in the area of international goodwill and understanding and spend less time counting their countries.

[I now have the QTH of Chuck's mother, should anyone wish to send a card of sympathy. Her QTH is Mrs. Swain, c/o Milligan College, Johnston City, Tennessee.—VK4SS.]

YRC

If any of my four readers missed this section last month, they can rest assured there is plenty going on in Y.R.S.—your correspondent was laid low by illness in the few days when the notes are written. This prelude introduces my special offer-of-the-month. The wealth of news from VK2 and to a lesser extent from VK3, coupled with the scarcity of news from VK4 and 5, sometimes makes these notes indicate a greater concentration of activity in VK2 than is actually the case. I feel sure there is much activity in VK4 and 5 (and more than I hear of in VK6 and 7). Therefore I ask some Y.R.S. enthusiast in each of the Divisions, especially VK4 and 5, to take a regular monthly turn in writing these notes—I am sure VK2 and 3 will guarantee to supply all the usual information. The high salary goes with it, of course!

Y.R.S. has wider aims than just W.I.A. apprenticeship, but it was highly likely from the beginning that W.I.A. would benefit, and now the evidence of this is coming through. In VK2 alone, the number of Y.R.S., ex-Y.R.S., and Y.R.S. leaders who gained at least A.O.L.C.P. stands at 30, nearly all of them W.I.A. full members. A few of these may have joined anyway, but most are a pure gain to our strength. There is a smaller but significant number in VK3 (and no doubt in other Divisions).

I have heard of some curious characters who hear of a few donations to the kids in Y.R.S. and ask why the adult members don't get them. I suggest that any grown man in a paid job is at liberty to walk into a store and ask for a donation! These characters forget also that much of the property of Y.R.S. consists of cast-off things rescued from the rubbish heap (sometimes literally) and made serviceable by uncounted hours of labour by the boys (and their leaders). I think most club leaders do as I do—they **lend** gear and have it returned when no longer needed, so nobody personally makes a profit. Fortunately our present executives mostly see the sense of Y.R.S., so let us hope no senile exponents of the sour grapes view displace them.

VK3 have nine clubs already in action and reporting—others should let the Y.R.S. supervisor know they are active. These clubs are at Australian Postal Institute, Gowrie Park, Bundoora (Christian Brothers), Geelong Grammar, Scotch College, Essendon Grammar, Caulfield Grammar, Australian Air League Squadron, Korumburra High.

Congratulations to non-club Peter Cole for passing full A.O.C.P., and to a Korumburra boy (any secretary there to write and tell me?) for gaining A.O.L.C.P. Radio orphans at City of Oakleigh Youth Club, Horton Rd., have a lecture room and practical room but no leader—anyone with a little evening time?

VK2 has 22 clubs already registered—well ahead of last year. Things are bright with 27 members at Sydney Teachers' College, and Bro. Kinsella, 2AXK, has lectured to a large group of Teaching Brothers on the virtues of Y.R.S. Latest count shows 279 Elementary Certificates issued to date. O.T.C. are happy to support Y.R.S.—20 per cent. of their intake this year are Y.R.S. trained. Postal groups are doing well with good Elem. passes from the group under Mona 2AXS (one was Jill Trewhalla following in dad's footsteps, the other Ron Cullen), and, even better, an A.O.L.C.P. to Ernie Chalker from John Thyrd's group—first N.C.P. to gain Amateur status. He is now an O.T.C. trainee. Others in tertiary education continue to do well—Roger Adams at University of N.S.W., Susan Brown, 2BSB, at Newcastle University, Colin MacIntosh, Max Holmes and Joe Mack at Sydney University.

To all—please register your club and send us more news of your activities.

73, Ken 1KM.

SWL

Sub-Editor: D. GRANTLEY, WIA-L2022
Alexander Ave., Hazelbrook, N.S.W.

In a recent editorial, "QST," the official organ of the ARRL, it was suggested by an unnamed Amateur "today the s.w.l. probably doesn't have a b.f.o. on his receiver, or if he does, doesn't know how to use it for sideband reception." The article refers to the possibility of s.w.l.'s not becoming interested in obtaining a ticket because they cannot understand what goes on in the Ham band as they could in the days of a.m.—"QST," February, 1966, P. 9.

To the Amateur concerned I would like to say this on behalf of our many young and capable listeners, please check your facts before including listeners as a whole and please don't include the VK listeners in your generalising. At the present time the VK DX ladder contains the names of 20 listeners, four only are c.w. men, and of those four only Eric Trebilcock doesn't use s.s.b. a lot. He has done quite well on c.w. Including the remaining three c.w. men, 14 of the 20 listed have heard over 100 countries, some almost 300. Now with c.w. available to 16 of the 20, and very few countries to be heard on a.m., it is evident that these scores are being piled up on s.s.b., thus proving their ability to understand and use the b.f.o.'s on the outdated receivers they are forced to use.

Finally, it must be pointed out that most of these chaps are in their early 'teens, as was the case when former s.w.l. Ian Thomas became the first VK s.w.l. to reach the century heard on s.s.b. several years back. All of which goes to prove that our VK listeners cannot be branded in the manner which this W Ham has slated all of us.

QSL'ING. Carrying on for the remainder of Frank Hine's remarks of this important subject we quote: "If the s.w.l. uses the bureau he has a problem in the information he can enter on the card. A QSL card will be treated as second class mail by the P.M.G.'s Department provided the written comment does not exceed EIGHT words, otherwise it becomes first class mail, and the cost of operating the bureau would rocket. Postal officials have at times opened a packet of cards and classified the lot as first class mail because of the amount of comment on one or two cards, and naturally the addressee bureau refuses to pay the extra exorbitant charges, and the cards are returned to the bureau of origin. Some bureaux can use first class mail only. Thus the s.w.l., to provide a useful report must either (a) have a pre-printed card to provide for a minimum of writing, or (b) send all reports direct to the station concerned, thus making the hobby expensive. Many world QSL bureaux have no alternative but to destroy uncollected cards after a period of time, these do not follow the VK2 practice of returning unclaimed cards," Frank 2QL.

To add to Frank's remarks I often send a quantity of cards direct to the foreign bureau concerned, and have a very high percentage of returns from this method. For example, if I have say five cards for the F Bureau I can send these first class air mail for 25 c the lot, the five cards usually weighing the required ½ oz. Thus each card costs less than by surface mail, and gets there normally within the week. Be sure of your correct air mail rates, and to this end I suggest you call at your nearest P.O. and ask for the blue pamphlet "Decimal Currency Postal Charges to Overseas Countries." This official publication lists all Commonwealth and foreign air and surface charges, and is a must for the busy QSLer. Thanks to Frank 2QL for his assistance.

DIVISIONAL NOTES—VK2. The annual general meeting of the VK2 s.w.l. group was held on March 18, and after the old committee retired the chair was taken by Pierce VK2APQ, who defined the finer points of the constitution. Quite a large number attended this meeting, and the following officers were elected: President, Gordon Crutch; Vice-President, Ross Erwin; Secretary and Treasurer, Chris Middleton-Williams; Liaison Officer, Ross Erwin; Publicity and QSL Officer, Chas. Aberneathy. The secretary's address is 3 Veronica Street, Chester Hill.. The April meeting will include a tour of O.T.C. Bringelly. Chas. L2001.

VK3 NEWS. During March the Vic. s.w.l. group reached the mark where 300 listeners' numbers have been issued, an increase of 150 in the last 12 months. Sad news for the group was that their AR7 which was loaned to VK3BX while the Collins underwent repair will not be returned to the group.

The morse training sessions are progressing well, and some members are proficient already. The 1966 S.W.L. Convention was held in conjunction with the State Convention at Ararat on April 23 and 24, and we trust that all who attended enjoyed the event. S.w.l. President Harry Roach went to ZL land for several weeks' holiday at the end of February. During his absence our underworked vice-president went into action to keep the group functioning. The group was unable to put L3100 into the field for the John Moyle event as Council had deprived the group of the use of the AR7. The long awaited s.w.l. newsletter should be published during April now that all the problems have been straightened out.

AROUND THE SHACKS: Syd Underwood now in hospital undergoing surgery; all the best Syd. From Chas. L2001 we learn that his 6 mx beam is down for overhaul after eight years use. Chas. has noted spasmodic openings on 10 mx. Bob Halligan L3229 earns our congratulations on obtaining his Z call—he is now VK3ZVV. Bob now sports a new rx of his own construction. New confirmations for him include CE6BH, TG9EP, GW-3NWV, OA4KY, IT1TAI, OD5CN and SM5LN. The 40 mx band has yielded HC, 9M2, KL7, HB, FK8, SM, GI, EA, VK9 and KP4 to help boost Bob's score.

Whilst in VK3, we look to Eric L3042 who now has reached the massive total log entry of 300,000 in his 39 years at the hobby. Continuing his upward climb towards the 300 mark, this stalwart listener has now logged 296 countries for 292 confirmations. QSLs to hand for Eric include CR9AH, FG7XX, G3SSO, HA5KFR, JA0BBB, OA4FM, OK1KKJ, SM-5DZM, XZ2TZ, K7LMU/HS, IS9WNV. Band reports from L3042 reveal only VKs 3 and 5 on 1.8 Mc., with VE1ZZ, SM3YF/MM and plenty of Ws on 3.5 Mc. On 7 Mc. VS9KRV, YU5FAD, LZ1KKZ, DL6XT, PA0AAJ, YO2AAF, etc., were coming through. 14 Mc. was another profitable band on which Eric heard most of the normal DX.

Over to Warwick L3211 who is still having rx trouble, despite which he heard two new countries, FS7 and VP2 (Antigua). Inward cards for him were 9M8KZ, PA0HBO, VE6BR, 9M6LX, ET3USA, UB5UN and EA4GZ. This now gives Warwick a score of 205/126.

Mac Hilliard L2074 and I are exchanging tapes once again. Mac recently took his rx up to Gosford where, free from QRM, he was able to catch a W break-through on 28 Mc. Encouraged by this, he is in the process of constructing a rotary dipole for that band in the hope of luring a few in over the Easter period. Alan Raftery of VK5 has been amongst the inward QSLs with ZD5R, KA2BW, VK9TL, VK0GS, PA0HBO, EA4GZ and G8JM, taking him to 62 confirmed. Alan, who is one of our tape correspondents, is sitting for the next A.O.C.P. exam.

Like most of our chaps, Bob Mutton, L7031, has been inactive, but has cards in from VS6, CR9, ON4 and VK9. He is one of our younger members who has just hit the 100 heard mark. Western Australia still produces the really good DX if my latest letter from Peter Drew, L6021, is anything to go by. 20 mx produced IS1TDW, 7Q7PS, OA4MX, TI6AL, UV3TC, UJ8AE, AC4YQ (suspect?), VS9KRV, ZL5AA, 6Y5OF and 9J2DT, whilst on 15 mx 9J2 and 7Q7 were heard. Peter also heard one of the VK6 boys working 9J2 on 20 mx, but he couldn't hear the DX.

Back to VK5 and Ernie Luff, L5080, whose 63 confirmations take him well on the way to D.X.C.C. His loggings on 20 mx for the month include KC6, ZC4, OE8, HB9, YN, HK, CE6, KX6, LA8, DJ5, TI2, HM, KW6, YV5 and OD5. Inward QSLs were OK1GT, SV1AE, 4X4BL and ZC4CI. In a later letter, Ernie tells me that he can offer a G award to any listener who can provide QSLs as proof of hearing 12 G stations on 20 mx phone, the 12 to include GI, GM and GW, the rest can be from any G or GB station. If any listener is interested, drop Ernie a line at 5 Shaftesbury Rd., Elizabeth Vale, S.A., but please enclose a stamped envelope.

On the home front I have been inactive other than for the first week of March. During that time however conditions were good on all bands up to 15 mx which was loaded with JA stations plus a few Pacific calls. Unfortunately a death in the family was the cause of a hurried trip to Melbourne and I have only just arrived back. Thanks to the chaps who have written telling of their activity, also to Bill Jehn L4001 and Vin VK3PJ for their letters.

AWARDS: A reminder chaps about the Elizabethan award which is available to listeners as well as Amateurs. Conditions are you need 8 QSLs from members of the E.A.R.C., these should be sent to the Elizabeth Amateur Radio Club, Box 8, Elizabeth, S.A. A card from club station 5LZ counts as two contacts. Watch for the club round-up on 80 mx at about 1000z on Monday when the cooler wx starts. Some member stations are VK5s ZE, WV, NO, DT, TM, MQ, DE, PE, ZCH, ZHJ, ZLO, FY, ZP and QL.

Re the D.X.C.C. award offered to listeners late last year. So far only two have been issued—to Eric and myself. What about it chaps, it took a lot of effort to have it available.

QUERIES: John Davidson, L4164, Lister St., Sunnybank, Brisbane, asks for circuit or any info on the S.T.C. type A679 rx. Mac Hilliard wants the QTH of FB9YY. Bill Jehn, Box 61, Ipswich, wants the QTH of OX3JV for a QSL.

That winds it up for this month chaps, 73 and good DX, and get those rx's ready for the R.D. contest. Don L2022.

CRYSTAL PYE DIVISION

Manufacturers of Quartz Crystals for Frequency Control and Crystal Filters for Highly Selective Circuits announce:—

NEW LOWER PRICES FOR CLOSE TOLERANCE GOLD PLATED CRYSTALS FOR AMATEUR APPLICATIONS

	Amateur Net (each includ. Tax)
• **1.8 Mc. to 14.999 Mc.** ±0.005% in Style "D" holders, ½" pin spacing	£2 8 6
• **15 Mc. to 47.999 Mc.** ±0.005% in Style "D" holders, ½" pin spacing	£2 10 6
• **48.0 Mc. to 61.0 Mc.** ±0.005% in Style "D" holders, ½" pin spacing	£2 16 3
• **100 Kc.** ±0.005% in HC13/U holders, ½" pin spacing*	£4 10 0
• **1 Mc.** ±0.005% in Style "D" holders, ½" pin spacing*	£4 10 0
* Specially designed for Crystal Calibrator purposes.	
• **455 Kc. nominal Crystals** for Filter applications in Style "D" or "E" (B7G) holders	£4 10 0

Many other types and tolerances are available from our standard production. Please consult us on your Crystal requirements.

PYE PTY. LTD. CRYSTAL DIVISION

CLARINDA RD., CLAYTON, VIC. (P.O. Box 105). Phone 544-0361

STATE OFFICES IN ADELAIDE, BRISBANE, HOBART, PERTH AND SYDNEY

VHF

Sub-Editor: LEN POYNTER, VK3ZGP
14 Esther Court, Fawkner, N.15, Vic.

General activity during the past few months has been average for the time of year. During Feb., 3ATN at Birchip has been active on 2 mx Moonbounce Project with Stamford University. Ray has recorded signals from the U.S. but to date no signals from Ray have been heard.

On Sunday, April 3, around 0830, 6 mx was open between Southern Australia and Queensland for some two hours with good signals in both directions; later in the day from 1300-1600 JAs were worked from Townsville—thanks to a telegram from 4ZRG. Signals were reported to be good in both directions. No reports from any other locations have been received to date.

Included below is a letter circulated to all Divisions re 6 mx t.v.i. I trust that it will be noted by all those looking for Melbourne and possibly Brisbane stations during t.v. hours.

At this stage I wish to inform all correspondents that due to pressure of other business I am forced to relinguish the compilation of these notes. In recent months, sudden demands have prevented me from adequately editing the notes and at times even submitting what I have received. For these I offer my apologies.

From the next issue, Cyril Maude, VK3ZCK, will take over and I trust that you give him all the help you can, particularly with forwarding your reports to arrive no later than the 2nd of each month. This is quite important. If everyone will prepare their notes in the suggested form, no re-writing will be necessary, just plain editing, etc.

My thanks to all those who have regularly forwarded their notes in plenty of time, particularly 5ZHJ and 4ZPL whose notes have arrived each month. Welcome to Mac VK2ZMO new writer of the VK2 notes. There has been no notes from VK6 for some months. Hope they will fill the gap very soon.

To all readers I wish you 73, best of DX, and trust that these difficulties will not prevent me appearing on 6 and 2 mx again.—3ZGP.

SIX-METRE T.V.I.

(1) Operation by stations on the 6 mx band in Melbourne and Brisbane is severely restricted by t.v.i. in receivers tuned to Channel 0, in some cases at ranges of the order of miles from the Amateur station concerned. The worst interference is suffered by near neighbours of the licensee, and these are the most likely to make their displeasure obvious!

(2) Mostly, even at a few hundred feet, t.v.i. can be virtually removed by using ribbon traps on the affected t.v. receiver (2 feet of ribbon plus 30 pF. trimmer, taped to feeder). These traps are very sharp and restrict the Amateur to operation within 100 kc. or so of the neighbours' trap frequencies. Full effectiveness of the traps cannot be achieved unless the Amateur frequency is well separated from Channel 0, preferably above 53 Mc. It is suggested as a standard practice that each Melbourne and Brisbane station should select his own trap frequency, above 53 Mc., if possible; fit and tune traps to this frequency on at least the near neighbours' sets; and use this frequency in preference to all others in the band.

(3) During DX openings it is observed that most stations in non-Channel 0 areas use frequencies near the 52 Mc. band-edge, and to ensure contact, it is virtually essential to call them on or near their own frequencies. In this case it is suggested that the initial call only be made on the lower frequency; that as soon as communication is established the Channel O Amateur should state his trap frequency and move to it; and that this be carried out by a standard procedure such as "I will QSY to trap frequency 53.22," for example, repeated twice.

(4) It is most important that this operating procedure should be recognised and acted upon by other than Channel 0 area Amateurs. It is therefore requested that all Divisions publicise among their 6 mx operators the possibility of encountering this procedure, so that they will be prepared for it and capable of tuning to the new frequency; perhaps persuaded to operate more themselves on the higher 6 mx frequencies.

(5) Summarising these and other recommendations:—

(a) To Melbourne and Brisbane stations, to minimise Channel 0 t.v.i. try some or all of the following:
  (i) Use vertically polarised beams;
  (ii) Operate above 53 Mc. on one frequency only;
  (iii) Use low power;
  (iv) Fit traps to all complainants' t.v. sets, carefully tuned to your freq.;
  (v) Use narrow-band f.m.

(b) To all other 6 mx stations, look for the Channel 0 refugees up near the top of the band.

—VK3 V.h.f. Group.

NEW SOUTH WALES

52 Mc. has been dead, over Xmas it was very poor, but fair openings at times, good opening to ZL land on one Sunday morning—2ZKW and 2ZMO worked quite a few ZLs. Bob 4ZRG was heard on during the mornings before going to work and gave 2ZMO 5/9 but Sydney only 5/5 or less. Bob heard during February.

The Hunter Branch boys—2ZKW, 2ZWM, 2ZUB, 2ZMO, 2ZCT—have 10 a.m. skeds on 52 Mc. band each Saturday and Sunday mornings; some mornings 2AVF, 2ZJG and 2ZDN come in on the net.

144 Mc.: This band is very lively some nights and on week-ends, other times hard to get a contact. Most active stations are: 2ZSG, 2ZKW, 2ZUB, 2ZWM, 2ZCT, 2ZMO, 2XT, 2ZFR, 2CN, 2YJ; others heard when time permits include 2AYL, 2AYF, 2ZBD, 2ZAP and 2ZJA. 2ZDN and 2ZCU have not been heard for a long while, but have come back on the band. Some stations can work Sydney on most nights; these are 2YJ, 2ZCT, 2ZDN and 2ZCU, some because of running high power, or very good QTHs. Ian O'Toole is doing National Service and has passed for a Z call. 2ZBD also about to enter camp.

Dave ZFR is new station in Raymond Terrace, making good use of a 522. Other new stations are 2ZFO (not heard as yet), 2ZGK has been heard. Our Hunter Branch 2AWX station is relayed on Monday nights at 7 p.m. by Gordon on 144 Mc.—144.443 to be exact.

Some stations are talking s.s.b. for this band. Kev is building mobile gear 6 and 2 mx tx's and converters into 80 mx Command, 7 Mc. transistorised converter, and also hopes to squeeze in the b.c. and 160 mx as well.

Tom 3ZTL out at Port Stephens is on 144 and also 52 Mc., have not worked him here owing to bad location between us. Tom is able to work some Newcastle boys and also Sydney at times.

Our 6 mx net also has been heard out at Orange so I am told. This is on the 10 a.m. net on Saturday and Sunday; most stations are around 52.5. Three or four of the boys are waiting on exam. results of the big guess, so may have more on the band. 73, 2ZMO.

At the April meeting of the VK2 V.h.f. Group a very interesting lecture on the applications of transistors in the v.h.f. spectrum was given by Bruce Ridley (2ZBR), of D.C.A. Laboratories. After the lecture the annual general meeting for the year was held. The election was a closely contested one with twelve call signs being proposed and as only six are needed for the committee, there was a wide choice for the members to elect for the ensuing 12 months.

Tim 2ZTM, although having officially left the committee, has been retained to act as adviser and official fox hunt starter. It is to be hoped that this committee can do as well as the outgoing members. 73, Stephen 2ZSK.

VICTORIA

Gippsland: Activity on v.h.f. in Gippsland is on the increase. **F.m. 2 mx**: There is now channel A home and mobile stations on the air from Bairnsdale, Sale, Traralgon, Morwell, Yallourn and Moe (along the Princes Highway), also Anderson, near San Remo. **6 mx a.m.**: Nil since 3ZCG heard 2AXB in Sydney and 3ZPL was heard by s.w.l. in Brisbane on 10/2/66. **2 mx a.m.**: Active nearly every night. Other than Reg 3AWV at Yallourn regularly working VK7s (he seems to have a very good path), the best break-through out of Gippsland took place during Feb. when George 3ZCG at Morwell (from his new QTH) worked 3ZTN Hamilton 144.15, 3NN Yanac 144.41, 3ZEF Bendigo 144.393, and heard weakly 7ZAH. Sunday morning 27/2/66 George worked 5ZDR Adelaide 144.065 5 x 8-9 both ways, and 5GP at Nairne in Mt. Lofty Ranges (20 miles east of Adelaide) 144.200 5 x 9 with QRM both ways.

3ZCG works regularly into Melbourne using 15w. on 144.003 Mc. and Sunday mornings (out of t.v.i. hours) uses the 150w. tx on 144.015 or v.f.o. 3ZDP at Sale looking for Melbourne QSO using s.s.b. on 144.08. Others active include 3ZOZ Moe 144.263, 3AHE/3 Newborough 146.485, 3AWV Yallourn, 3QZ Traralgon, 3ZPL Moe, and 3ZAB at Traralgon.

VK3 V.h.f. Group: The notes are very short this month mainly because of the lack of activity on 6 and 2 mx. There have been a couple of DX openings on two mx to VK5 and VK7. The only other activity of consequence being the V.h.f. Group's annual meeting and election of office-bearers for the forthcoming 12 months. Also at the annual meeting Jack 3ZJF read out some of the agenda items of v.h.f. interest that were to be discussed at the Federal Convention at Brisbane over Easter.

The office-bearers of the Group are: President, Cyril 3AEE; Vice-President, Jack 3ZJF; Secretary, Peter 3ZPA; Treasurer, Trevor 3ZTJ; Publicity Officer, Cyril 3ZCK; Equipment Maintenance, Ken 3ZNJ; QSL Manager, Bill 3ABP; Council Rep., Jack 3ZJF.

SOUTH AUSTRALIA

Activity in VK5 at the moment enjoys perhaps the greatest increase for any post Xmas period experienced for many seasons. This increase in acitvity is due mainly to the arrival on the bands of newly licensed operators, who in the process of making the most out of their initial enthusiasm are developing their equipment to the usual VK5 "big sound" signal. Fortunately their enthusiasm has not been restricted to 6 mx as a few have also made their debut on 2 mx. The more the merrier.

The increase in 6 mx activity, to a certain degree, is attributable to the W.I.C.E.N. net on 53.1 Mc. Under the auspices of Geoff 5TY, W.I.C.E.N. in VK5 is at last moulding itself into an effective and proven communications group. Already their efforts to date have received commendations in letters from the S.A. Commissioner of Police and the Director of E.F.S. in S.A., for their assistance in providing essential and reliable communications during a recent bush fire in the Adelaide Hills.

The majority of 2 mx operation has been provided by extended ground-wave propagation into the Port Pirie area and the western regions of VK3. Frequent signals from VK3 heard and worked by a number of VK5s in March were 3ZCG, 3ZTN, 3ZDM, 3AOS and 3NN.

News from Mt. Gambier on 2 mx is that Trevor 5ZTN has completed his new modulator (2 x 881As) and is capable of modulating his final p.a. 100 per cent. John 5HP, ex-5ZHL, is active on 432 Mc. and was reported to have worked 3ZDM using a 5w. tripler. Just at the moment the South East Group are busily preparing for the onslaught of v.h.f. types to their Group Convention on the week-end, June 11, 12 and 13. This occasion has always been well attended and should be well patronised again this year.

432 Mc. activity is practically non-existent apart from the t.v. on the high end and John 5ZJH still patiently listening to Oscar IV. in the hope of making a two-way contact. 73, Colin 5ZHJ.

— · · · —

Publications Committee Reports That . . .

Due to the postal strike much mail was delayed and to assist all correspondents inwards mail was kept open until the 15th April and any items received after that date will be acknowledged in next month's "A.R."

Correspondence was received from VKs 2ZTM, 3RC and David Priestley along with technical articles from 5ZBP/T, 3ZRY and H. C. Major.

It is with regret that we announce that S. Clark, VK3ASC, has resigned from the Committee due to personal work taking up his "spare" time. We will miss his outspoken and clear comments at our meetings, and thank him for his many years of service and trust that he does well in his new activity.

Readers will be pleased to see the Prediction Charts appearing in this issue and we request comments whether they prefer these charts to be presented as in this issue or whether they would prefer a simple bar chart showing only the Amateur bands that are predicted to be usable, neglecting other frequencies. The same circuits would be available and are all based upon Canberra, as this is likely to suit the majority of users.

It is with great interest that we await full details of the Australian Amateur Satellite Radio that will be launched in the U.S.A. At this juncture we only have a very brief story and will publish full particulars as soon as plans are fully developed.

FEDERAL AND DIVISIONAL MONTHLY NEWS REPORTS

(SEND CORRESPONDENCE DIRECT TO DIVISIONAL REPORTER NAMED AT PARA. END)

FEDERAL QSL BUREAU

Scores of cards were returned in early April by the J.A.R.L. No reason was stated and no endorsement appears on any of the returned QSL's.

The QSL manager for VK0MI, Colin Lebbon, currently very active from Macquarie Island, is Greg Johnston, 3 Inglis Street, Newtown, Hobart, Tas. Colin, who some time back held a GM3 call, left a few hundred blanks with Greg. At the present rate of QSO they will not last very long.

The R.S.G.B. QSL Bureau advises that the Bureau will be closed from May 3 to May 23 inclusive and requests no cards to arrive during that period.

Frank Pfeiffer, K6JIC, writes as of March 10: "For the next two years I will be the QSL maanger for K6KII/KG6 on Guam Island. In addition to the Guam Is. activity I will also be the QSL manager for any of his DX-peditionary adventures.

K6KII is Cliff G. Moore, U.S.N., presently attached to the U.S. Naval Security Group on Guam. DX-er and contest man for some ten years now and presently 319/318 for DXCC. Cliff will be active 80 through 10, and is hoping for some 160 operation.

The normal DX QSL procedure is desired, and that being date and time in G.M.T., and S.A.S.E. or S.A.E. and I.R.C.'s for direct replies.

Info is required as to the Australian QTH of Joe VR4JB. It is stated by VR4CB that Joe has now returned to Australia.

—Ray E. Jones, VK3RJ, Manager.

— . . . —

NEW SOUTH WALES

There was a large attendance at the VK2 Division's annual general meeting at Wireless Institute Centre, Crows Nest, on 25th March; visitors were welcomed by the Chairman (Ivan 2AIM), among these being David 3QV, a member of Federal Executive. The annual report, which had previously been circulated, was taken as read and adopted after complimentary reference to its comprehensiveness.

This year there was more than usual interest in the election of Council, with a ballot for the first time. Eight nominations were received for the seven positions, and the voting resulted in the following being elected: Peter 2AXJ, Kevin 2ANY, Mrs. Hebe Grouse 2AOK, Bill 2YB, Maurice 2VV, Tom 2OD, and Charlie 2ALB.

The Chairman announced that the Auditor's report and balance sheet could not be presented at that meeting as there had been a last-minute hold-up in some of the figures required. These would be available at the April meeting, to which the annual meeting was then adjourned.

The March general meeting followed, the main feature bein ga programme of films arranged by the Education Officer, Harold 2AAH, assisted by Phil 2ZPI. In addition to two short films dealing with mobile work and the radio club classes at Murwillumbah, a most interesting film, in colour, dealt with the production and uses of electricity.

The vote of thanks to Harold and Phil was handled by David 3QV, and later in the meeting Harold, as Education Officer, was given a vote of thanks and appreciation for his work in arranging lectures of such high standard over the past five years.

Short reports were given by Sid Molen (QSL Officer), Vic Cole (W.I.C.E.N. Supervisor), Harold Burtoft (Education Officer), and David Rankin (Federal news).

The Chairman referred to the death since last meeting of Frank Pearson, 2ACQ, who was well known as the Morse practice supervisor, and one minute's silence was observed by the meeting.

Frank's work is being carried on by Ern 2EH, who is looking after the Morse tape service, and Doug 2AUC is now in charge of the nightly Morse practice sessions. The latter will be assisted by Jim 2AKE when necessary.

At the conclusion of the March meeting the newly-elected Council met for a few minutes and elected Tom 2OD to the position of Divisional President, and after his first Sunday morning broadcast to members he received congratulations from all parts of the State on his elevation to the chair.

The new Council's first business meeting took place on 1st April, with a fairly late sitting. At the invitation of the President, Ivan 2AIM, the retiring President, attended the meeting and assisted with the handing over of various matters that had been dealt with during the closing stages in the life of the previous Council.

The election of office-bearers for the ensuing twelve months resulted as follows:

President and Chairman of Council, T. M. O'Donnell, 2OD.
Senior Vice-President, W. J. Lewis, 2YB.
Junior Vice-President, C. J. Wilkins, 2ALB.
Secretary-Treasurer, Mrs. B. Gerdes, Assoc.
Circulation Manager and Registrar, W. Johnston, Assoc.
Minute Secretary, R. M. Marsden, 2VV.
Education Officer, H. F. Burtoft, 2AAH.
Supervisor, Y.R.S., R. C. Black, 2YA.
A.O.C.P. Supervisor, C. E. Bardwell, 2IR.
Bulletin Editors: A. G. Sabin, 2AGS; W. Johnston, Assoc.
Hon. Solicitor, W. Clark, Assoc.
QSL Officers: S. E. Molen, 2SG; C. E. Whiting, 2ACD.
Morse Tape Service, E. P. Hodgkins, 2EH.
Morse Practice Supervisor, D. G. Courtney, 2AUC.
Disposals Committee: L. W. Squires, 2SD; W. Kuhl, Assoc.; S. Kuhl, 2ZSK; T. I. Mills, 2ZTM.
W.I.C.E.N. Supervisor, V. L. Cole, 2VL.
O.C. Dural, D. H. Duff, 2EO.
Grounds Officer (Dural), L. H. Cartwright, 2ZJC.
Librarian, K. de Haan, 2UE.
Zone Correspondent, I. M. Agar, 2AIM.
Other appointments will be made later.

In his initial welcome to the incoming Councillors, the President especially mentioned the presence of Mrs. Hebe Grouse, 2AOK, and said that, so far as he knew, this was the first time in the history of the W.I.A. that a member of the fair sex had been a member of a Divisional Council, and he hoped that Hebe would remain on the VK2 Council for a long time.

The VK2 S.w.l. Group's annual meeting was held during the month of March. The Federal Councillor, Pierce 2APQ, was invited to take the chair and the following office-bearers were elected: Pres., Gordon Crutch; Vice-Pres., Ross Irwin; Liaison Officer, Ross Irwin; Sec.-Treas,. Chris Middleton-Williams; Publicity and QSL Officer, Chas. Aberneathy. When these notes were being written, the S.w.l. Group was endeavouring to whip up interest in what should be a very interesting tour of inspection to the O.T.C. Receiving Station at Bringelly on 23rd April.

The V.h.f. and T.v. Group held its annual meeting on 1st April, when there was an excellent attendance. Stephen 2ZSK was elected as Group Chairman and other appointments resulted as follows: Vice-Pres., 2ZEX; Sec., 2ZIW; Committee: 2ZIM, 2ZPC, 2ZDD. I. McKenzie was appointed W.I.C.E.N. Officer and P. Carter and C. Jones comprise the Contest Committee.

We regret that we have to report a tragedy that has occurred in the family of one of our well known members and a one-time member of Council, Roy 2KO. On the evening of 25th March their 17-year-old son, Peter, was struck by a car while walking along the road near his home, and died of his injuries. We join with their many friends in extending sincere sympathy to the bereaved family.

Muriel 2AIA, one of our better known DX chasers, has made a good recovery following a recent operation. At the moment she is a patient at a Sydney convalescent home, but it should not be long before she is on the air again.

Raoul Thomas, FK8AU, who has frequented the 14 Mc. band for many years, arrived with his wife, Georgette, at Kingsford Smith Airport on 2nd April, en route for France on four months' long service leave. During their stopover of about an hour and a half at the airport, they were met by Bill 2AGF and his wife and daughter, and Ivan 2AIM and his wife. Their jet aircraft took off at 4 p.m. and was expected in Singapore that night. Truly the world is shrinking! 73, 2AIM.

CENTRAL COAST BRANCH

The last meeting of the Central Coast Branch of the W.I.A. was held on March 18 and had a larger attendance than usual, which was very gratifying as this was the annual meeting and there were a few jobs to be filled. There were several new faces from as far away as Vales Point and Mangrove Mountain and we hope this trend continues.

The new officers are as follows: Pres., Lindsay 2ON; Vice-Pres., Ern 2EH; Sec., Frank 2AFJ; Treas., Phil 2TX; Publicity Officer, Mona 2AXS; Public Relations, Gordon Proctor. The retiring Pres., Ern Hodgkins, gave a report on the activities for the year which included several interesting visits to places like O.T.C. at Bringelly, A.W.V., etc., some social events, and of course the Field Day which was the highlight of the year. We are still hearing nice things said about the Field Day.

One minute of silence was observed for Frank Pearson, 2ACQ, who died suddenly on March 3 at his home at Woy Woy. 73, Mona 2AXS.

VK2 DIVISION

NEW AND SURPLUS EQUIPMENT

The VK2 Division of the W.I.A. operates a store for the benefit of members. We would again like to bring to the notice of members of other Divisions that its facilities are also available to you. A comprehensive catalogue may be obtained by writing to: **Disposal Section, Wireless Institute Centre, 14 Atchison St., Crows Nest, N.S.W.** Mail order inquiries are welcomed or your personal visit when we are open on meeting nights and on the 2nd and 4th Saturday afternoons of each month.

Some of the items available include:—

CRYSTALS

A range of 82 frequencies between 3540 and 6450 Kcs. in FT243 holders, $1 each or 5 for $4.

CAPACITORS

Mixed bags of small and medium values in mica, disc ceramic and silver mica. Approx. 100 to the bag, $1.75.

TELETYPE EQUIPMENT

A range of surplus R.T.T.Y. equipment was recently obtained. It included keyboard page printers, keyboard reperforators, tape transmitters, etc. If you are looking for R.T.T.Y. items, try us, we may have it.

NEW EQUIPMENT

Building something? We have quite a range of new parts for that project, including meters, transistors, 2-metre beams, tools, test equipment, capacitors, transformers, coil formers, plugs, sockets, knobs, dials and many others. All these are listed in an illustrated catalogue available free by writing to Disposal Section, Wireless Institute Centre, 14 Atchison St., Crows Nest, N.S.W.

YL NEWS FROM SYDNEY

We are happy to report that Muriel 2AIA is well on the way to recovery after a recent operation. She will have a short stay in a convalescent home before returning to her own QTH where she is her own chief cook and bottle washer. We have missed her on the air and look forward to hearing the familiar voice again very soon.

Hebe 2AOK has a regular contact with the South-East Asia net each evening which she finds very interesting. Just quietly, I think she is working up a pretty good score on new countries. 73, Mona 2AXS.

— • • • —

VICTORIA

EASTERN ZONE

Tours of the Orient seem to be popular at the moment with some of the Amateur population in the zone. Alex 3ZII has been to Malaysia as radio technician on a recent R.A.A.F. trip. An enjoyable time was had but Alex wasn't particularly impressed with the cleanliness of the cities. Graham 3QZ and his wife have just returned from a tour of Japan and Hong Kong. We trust the trip was most enjoyable. I wonder what is new in the shacks of 3ZII and 3QZ?

There are a couple of new Amateurs in the zone, John 3ZOJ in Maffra and Philip 3ZTF at East Sale R.A.A.F. base. Philip feels that he may get a posting to VK4 so we may not have Philip with us for long. He is in the throes of getting some 6 and 2 metre a.m. gear functioning — semi-transistorised, too, When it is a goer what about an article for "A.R.," most of us aren't particularly familiar with transistor gear. John, I believe, hopes to get the full call before too long.

David 3DY is active on 3.732 Mcs. on the Civil Defence network at Maffra. The transceivers used are converted valve-type car radios. The transmitter sections I believe use a 12AT7 and 6CL6 in the "Golden Gate" circuit. The 10-metre band David reports as being open at times. John 3AED has been active on 80, 40, 15 and 20, with considerable amount of DX being worked on the latter band using the ever more popular s.s.b. Cliff 3AJA is occasionally on 40 c.w., and Peter 3ZDP has evidently deserted 6 a.m. for 2 s.s.b. We have at least two active s.w.l.'s in the zone, namely, Albert Cash of Morwell and Bob Stewart of Newborough. Albert uses a t.v. tuner for 6 and 2 metres, which I presume feeds into his home-brew receiver. Bob monitors 2 f.m. and a.m. as well as 40 and 80 with an assortment of aerials in use.

The zone took part in the National Field Day in February under the call sign of 3QZ as a multi-operator station from Mt. Worth near Warragul, running up a points score of 206 in six hours. George 3ZCG must be our keenest field day competitor, taking part in most, and all from different mountain tops. The Mini Minor must know all the high spots in Gippsland by now. George has also shifted his permanent QTH in Morwell with better v.h.f. results; and fewer t.v.i. troubles I trust.

Stan 3ZAB was up in Sale for the Trade Fair. Stan was chief demonstrator/cook on the S.E.C. stand, demonstrating their new 2½-k.w. u.h.f. transmitter . . . er, sorry, microwave stove. The stove uses a continuous wave magnetron on a frequency of 2,450 Mcs. I wonder if we'll hear Stan on 2,450 Mcs. using high power. Hm, perhaps it could be adapted for Ham-band use. Could be that we will be using old microwave stove parts for the rig instead of old t.v. set parts in a year or so.

Cliff 3AIT has his new 60-watt 6-metre transmitter functioning, using a 6U8 driving a 6146, all that is necessary now is a large yagi. The s.s.b. bug has also bitten him and he is delving into circuit designs, and no doubt eyeing his shelves of spares, particularly that 4CX1000A. Rodney 3UG has his 160-80 metre 125 watt rig completed, and from reports to date is functioning satisfactorily. Certainly should put out a better signal than the 8 watt unit it replaces.

Now on to something of a different nature, but equally important to us and quite serious.

As Amateurs are we becoming too complacent about our bands and what will happen at the next I.T.U. conference. As a whole I say we are, we will need to fight hard if we are to retain our bands. There have been some very interesting, if disturbing, editorials in "A.R." I would suggest you re-read them, there is a lot in them. It is so serious that even in America they are wondering how much of the bands will be lost. Read through the "73" editorial of February, 1966. The least we can do is show our support to our Federal and State Institute officers both by subscribing to the I.T.U. fund and by spending time to help in Institute affairs.

Well, that's it for this month, with thanks to George for notes supplied. 73, VK3UG.

SOUTH-WEST ZONE

As most of you are aware the zone conconvention was held in Warrnambool over the eight-hour week-end and there was quite a reasonable attendance. We were sorry that there was not a representative from Ballarat at the Annual Meeting, for we like each city or town to be represented.

Those present at the meeting were as follows: 3WK, 3IC, 3ZTN, 3AFJ, 3FX, 3XE, 3XI, 3AXI, 3ANQ, 3APR, 3AWQ (Chris Hall), 3AAW (Bill Wines), E. G. Hutchins, R. Anderson, G. McSwain, D. McSwain, R. Sheppard, P. Hose, Barry Gore, all from the Y.M.C.A. Radio Club.

The meeting was chaired by 3AFJ Ken Pincott for the election and installation of new office-bearers, this was carried out most ably and we thank Ken for a good job.

Office-bearers elected are as follows: President, Eric 3ANQ; Vice-Presidents, Senior VK3WK, Junior VK3XE; Secretary-Treasurer and Publicty Officer, W. Wines from VK3AAW; Auditor, Peter 3FX; Station Officer, Harry 3AXI; Committee: Chris Hall representing 3AWQ, Gordon 3AGV, Bob 3IC, David 3ZTN, Bill 3XE, R. Heighway 3ABK; W.I.C.E.N. Coordinator, John Woodburn 3AGD.

After the meeting a barbecue tea was held which everyone enjoyed immensely. Our thanks to Mr. Bill Hammond who volunteered to cook the meat. Bill knows nothing whatever about radio but certainly knows how to barbecue a chop, many thanks Bill. Thanks also to the ladies who did a splendid job with cuppas and supper later on in the evening.

After tea Chris Hall of 3AWQ Technical College Radio Club showed some very interesting films of the Snowy River Scheme along with one of a rodeo in Colac and the other of the Australian Surf Championships held in Warrnambool some years back. At the conclusion of the films, 3LC Alf and 3WK Bill supplied some surplus gear to be auctioned, once again 3FX Peter acted as auctioneer.

Sunday morning at 9.30 a.m. the judging of the best mobile equipment was held. The Commercial V.H.F. Gear Section was won by 3FX and Home-made Gear Section by 3ZTN. The next event was the 144 blindfold transmitter hunt, this was won by Terry Glidden. The all-band scramble was won by 3LC Alf for the high frequency band, and David 3ZTN won the v.h.f. scramble. A very nice picnic lunch was organised and prepared by the ladies and enjoyed by all. Our thanks to the ladies.

After lunch the 80 metre transmitter hunt was held, and only in the last few minutes of the allotted time 3ZJF Jack Taylor from East Brighton won the event. The transmitter was hidden by 3XE under a steeplechase jump at the racecourse.

The 144 transmitter hunt was won by 3ZJF with the aid of his sniffer. After this hunt afternoon tea was served, followed by presentation of prizes to successful Amateurs.

In conclusion we would like to thank the Principal of the Technical College, Mr. Conry, for permitting us to use the canteen and Assembly Hall for the barbecue and meeting. Once again many thanks to our chef, Bill Hammond and to the ladies and to all who gave assistance to make the convention a success.

Finally, we were very pleased to see on Sunday visitors from VK5 including 5CJ and 5MS. 3ZER was also among the many present. 73, Bill Wines, Hon. Sec., VK3AAW.

WESTERN ZONE

By the time these notes appear in print the State Convention at Ararat will have passed, and let us hope all of those who were fortunate to attend enjoyed themselves, meeting old and new friends.

There does not seem to be much activity in the zone, although a few still are working v.h.f. and 20 mx DX. It looks like the zone hook-ups will be eventually on s.s.b. as no fewer than four are on that mode of transmission at present.

Very pleased to hear Alan 3HL the other night and to know he is fine after his recent illness. Our worthy Secretary, Bill 3AKW, has returned from his visit to ZL land full of vim and vigour, and is now ready for another year of toil. 3NX purchased a commercial v.f.o. some months ago but so far no QRM on the bands—so what about it Gordon? 3AEJ has a 60w. a.m. rig but so far I have not heard it Gavin. Bill 3ZAX was unfortunate to get a piece of steel in the eye recently; let's hope it was not serious and all is well by this time. Your scribe is trying to get together the parts for a linear amplifier but more about that at a later date.

Have not seen sight nor sound of Trev 3ATR, but see in the local paper where he received several hundred dollars as prize money in the recent Moomba Air Race. Congrats. to you OM. Also saw in one of the papers a photo of Vic Maddern getting instructions on a glider. 73, Bert.

QUEENSLAND

The Queensland Division of the Wireless Institute of Australia was privileged to be Host State for the 30th Federal Convention of the Institute over the Easter week-end, April 8 to 11, 1966. The last Federal Convention held in Queensland was in 1936—just 30 years ago.

The Convention got under way at 11.30 a.m. on Good Friday morning immediately the VK6 delegate arrived in VK4. All delegates worked very hard taking little time to eat or play until Saturday evening when they were taken on a launch trip to Bishop Island at the mouth of the Brisbane River, for a barbecue supper which was thoroughly enjoyed by all.

Back to work on Sunday morning bright and early and as agenda was well advanced at 1 p.m., the Convention broke for a trip to our famous Gold Coast with a picnic lunch at Mount Tambourine on the way. The Convention finished early on Monday afternoon and a terrific agenda was completed, and if I might say so, very efficiently. All delegates attended all sessions and gave of their best efforts.

The Wireless Institute of Australia are fortunate indeed to have such an efficient team of Councillors who work so hard for the Wireless Institute in general and the Radio Amateur in particular.

This would be the most successful Convention ever and from it will come some very advantageous and far reaching things and I commend you to carefully read all reports. Congratulations, gentlemen, on a job well done. Reg 4VX.

TOWNSVILLE AND DISTRICT

Very little activity in the north at present, so much so that I find it hard to do the notes each month and it would be a pity to see them discontinued. So what about it chaps, why not drop a line and let us know just what is happening in your part of the country. No use moaning if a certain State seems to get more space than the others. It is all in your own hands.

Ted 4EJ hopes to complete the new Transceiver within the next few months. Very fast running out of room to place the few remaining parts that have to be soldered into space. Charlie 4BQ and Evie 4EQ were around the other week-end to help put up a vertical vee dipole. Now it performs better than the one at Charlie's place, according to Bud 2AQJ in Canberra.

A visitor from across the Tasman Sea is John ZL2BBE on a holiday looking over the field for employment, sporting a temporary call sign of 2BBE. Hard to convince that ours is the best place in the Commonwealth.

As the meeting of the local club is on after the notes are sent, I am unable to give the country boys any news of what is happening. Only that there could be a few starters if the club decides to go ahead with the A.O.C.P. classes, which I do hope eventuates. 73, 4RW.

— • • • —

SOUTH AUSTRALIA

The monthly general meeting of the VK5 Division, sometimes known as the Division that put the Vee in verbosity, was held in the clubrooms on the fourth Tuesday in March, to a standing room only gathering of members and visitors. The excellent attendance was not althogether unexpected, as the night took the form of a jumble sale—buy and sell to you —and can always be counted upon to get the members together and prize their shekels away from them. The Chairman, Ross 5KF, opened the meeting for business, but aside from a letter from the South-East Radio Group, and a few remarks from the Federal Councillor, Geoff 5TY, on the coming convention and the agenda items, the business side of the meeting was soon disposed of. Distribution of QSL cards followed, and the meeting settled down for the main business of the night, the jumble sale. Nothing new can be written about this type of night, except perhaps to say that the shekel extracting was shared, as usual, by Brian 5CA and Phil 5NN, and considering the rather poor standard of equipment up for disposal practically all night, they both made a superhuman effort to talk over the several unofficial meetings being conducted in various parts of the hall, and eventually disposed of the mountain of gear on display to the satisfaction of all concerned—almost anyway—and the meeting closed at 11 p.m., beating the arrival of the caretaker and his Alsatian by two growls and a jump. Personally, I did not wait for the end, I sighted the Alsatian before he sighted me, and was in top gear before he even started his engine, much to his disgust. Anyway, a good time was had by all, and after all, what more can one ask.

Now I know your curiosity has been aroused concerning the letter read out from the S.E.

TRIMAX for a complete transformer range!

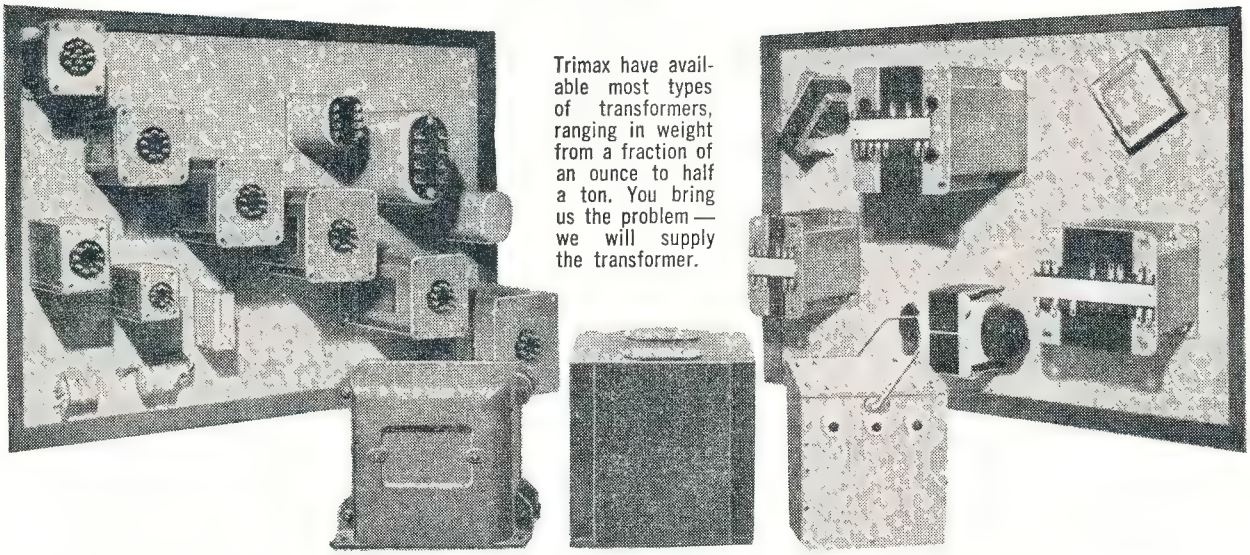

Trimax have available most types of transformers, ranging in weight from a fraction of an ounce to half a ton. You bring us the problem — we will supply the transformer.

L M ERICSSON PTY. LTD.

"TRIMAX" DIVISION

FACTORY: CNR. WILLIAMS RD. & CHARLES ST., NORTH COBURG, VICTORIA. 'PHONE: 35-1203 . . . TELEGRAPHIC ADDRESS: "TRIMAX" MELB.

LM 51

FOSTER DYNAMIC MICROPHONES

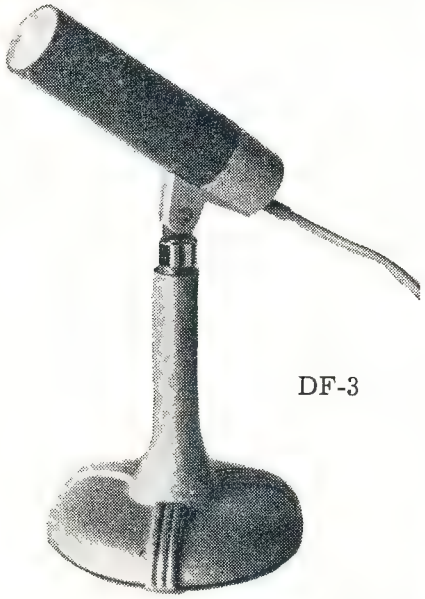

DF-3

SPECIFICATIONS:

Output Impedance .... 50 ohms or 50K ohms
Effective output level .... —55 db. [0 db. = (one) 1V. Microbar]
Frequency response .... 50 to 15,000 c.p.s.

OMNI-DIRECTIONAL DYNAMIC:

Plastic Diaphragm.
Size: 4½" long, 1¼" diameter.
Cable: 12 ft. of P.V.C.
Swivel fits 5/8" 26 t.p.i. Stands.
Colour: TWO-TONE GREY.

Retail Price 50K ohms: £4/16/0 + Sales Tax 10/0
Retail Price 50 ohms: £4/14/0 + Sales Tax 9/10

A QUALITY PRODUCT FOR TAPE RECORDERS & P.A. USERS

Marketed by **ZEPHYR PRODUCTS PTY. LTD.**

58 HIGH STREET, GLEN IRIS, S.E.6, VICTORIA Phones: 25-1300, 25-4556

Manufacturers of Radio and Electrical Equipment and Components

Agents: D. K. Northover & Co.; Neil Muller Ltd.; Homecrafts (Tas.) P/L.; Jacoby, Mitchell & Co. P/L.; T. H. Martin P/L.

Radio Group, so I won't keep you in suspenders any longer, so here goes. The group is holding its annual V.H.F. Convention over the the long week-end of June 11, 12, 13 and 14 of this year and is naturally anxious that this event be as successful as its two previous conventions, and they cordially invite all members interested to register. Registration forms, which also provide for the booking of accommodation, are available from the Group, or from the VK5 secretary, Al 5EK. Go to it now, don't hesitate, don't delay, first come, first served, etcetera, etcetera, etcetera, and a couple of diphthongs!

I commented earlier on the unofficial meetings taking place in various parts of the hall during the buy-and-sell, and it goes without saying that this tends to distract both the audience and the shekel gatherers from the business in hand, and is something that is hard to stop. However, I do feel that this tendency to yackety-yack on the part of the members should bring home to Council the fact that at least once a year we should hold a get-together night for the members, declare the meeting open, and let them go to it. Just think of it, the members would provide their own entertainment, Council could have a night off once the yackety-yack started, and a good time would be had by all. It's worth thinking over—or is it?

Geoff 5TY, after a lot of arm twisting, as the W.I.C.E.N. co-ordinator, announced with pride and joy that the Division had received a letter from Police Commissioner McKinna, and one from Mr. Kerr, Director of E.F.S., both complimenting W.I.C.E.N. on its efforts during the recent bushfires in the foothills. A feather in our cap, if I might say so, and a definite sign of the times, at last W.I.C.E.N. has arrived in VK5.

When Doc 5MD passed away I assumed as a temporary measure, the duties of Custodian of the Instruments, a job which entailed very little work, in fact, I think I had about six enquiries for the instruments in about two years. Council, with its usual consideration for my welfare, and a possible thought of saving me from a nervous breakdown, this month suggested that Jim 5FO might relieve me of the strain. I willingly assented, especially as he had been acting as the unofficial custodian for some time, so in future, if you want any of the instruments, get in touch with him, and he will be more than happy to oblige. He is a good scout, and always happy to help out with advice.

One of my espionage agents, 006 and three-quarters, he just misses the Bond image by a quarter, reports that Murray 5ZQ has been bothered at odd times in the W.I.A. broadcasts with a gremlin in the antenna system. However, he tells me that a dash of antenna construction work by Murray has now banished the said gremlin for good, much to Murray's satisfaction.

Joe 5JT, also compaining of troubles with his new antenna. He was originally using a certain length of co-axial, with the excess coiled up, and was more than satisfied with the results. Then the "brains trust" moved in and advised the cutting of some co-axial off, and disaster struck. Joe, I am surprised at you, you have been in the game long enough to known when to let well alone!

Having been hibernating on 14 Mc. lately, polishing up my glass arm, I found myself right out of touch with the local gentry on 7 Mc., with the natural result that I was sadly lacking in news for this month. Remedying this position very rapidly, the first stations that I heard were the old reliable "terrible twins," Jack 5LN and Athol 5LQ, busily engaged on their usual schedule before the evening meal. Jack was bemoaning the rapid passing of time, and Athol was heard to remark that if he felt really fit he might pay a visit to the QTH of Jack on the coming Sunday morning. A couple of old codgers if ever there were!

Heard Hughie 5BC on the same band at terrific strength one early evening, so much so that I doubted whether his signal was coming from his home QTH. The next time I heard him, about a week later, he was signing a VK3 portable, and still with a good signal. The VK3 he was working was having a bit of trouble with copying his name, but finally made it O.K., and said that names like George, etc., gave him no trouble to copy, but Hugh was a little out of the usual run of names. No wonder I used to call him Otto when we worked on the Adelaide-Renmark telegraph circuit, much to his disgust.

Listening in to Joe 5JO I was surprised to hear him say that he had been confined to his bed for a little while, but was now on the way up. It appears that he left for a trip around the VK3 country areas early in March but had to turn back owing to the heat, and had suffered a recurrence of his old trouble and was still a little whizzy in the head at times. Take it easy Joe, try the short distances.

Max 5OS in talking to Joe said that he had not been on very much of late, and also had a few words in praise of the magazine and the gang who put so much voluntary time in getting it into circulation. Unusual, if I might say so, and worthy of note.

Jack 5JS off for a week at Whyalla, I will bet there is a bike race on up there at the same time. Was brazenly heard to say that he had just reurned from a three weeks' trip to VK7. What it is to be a plutocrat!

Max 5GF heard mobile in VK3—Geelong to be definite—and the signal was extra good around early evening time. He was just arriving at Geelong for the evening meal and then would continue on to Melbourne at a later date.

Talking of VK3, and I know I should not do so, I detect a trace of the Pincott 3AFJ influence in the recently reported visit of Premier Sir Henry Bolte to VK5 in an endeavour to take over a slice of the continental shelf territory off the VK5 coast! Ken has never forgotten his sojourn in VK5 some years ago, and appreciating our possessions as he does, I am not suprised that he would like to engineer such a take-over. No chance, brother.

My old Palswy-walswy Dud 2DQ from Broken Hill was given the run-around the other night on 80 mx by the other members of the s.s.b. net, who arranged to all shift 2 Kc. after his transmission and then to complain that he had shifted that amount in frequency. If rumour is correct, poor old Dud was ready to return to a.m., and to write a stiff letter on cardboard to a certain gentleman in VK2, but fortunately woke up to the stunt before he put too much in writing and posted it off. You could have fooled me OM, what's 2 Kc. to an old stick-in-the-mud like me?

Whacko—did you notice VK6 trying to get on the band waggon in "Letters to the Editor" in the March issue of the magazine. Flattery, flattery, I can't seem to dodge it these days. Was tickled pink at the suggestion that he would not like to get his Division to take some action, although the "Mice" should not need such stern action to stir them up. You Beaut! I have called them some names in my time, but never have I been so game as to call them that. Remind me to send them some cheese some time. Very funny!

Uncle Tom 5TL has at last got his QRP rig airborne. At a power of approximately .7 of a watt he tried it out on Geoff 5TY, and whilst it did not exactly bend the S meter needle hard over, it was workable c.w. and quite readable. My query of Tom as to whether he still needed the camel or small elephant to carry the set-up was disdainfully dismissed with the reply that even the caretaker's Alsatian could carry it. That settles it, I hope the hound dawg knows the difference between the seat of the fire and the seat of the members' trousers, which I doubt, going on his actions to date!

The above paragraph takes my mind back to 1939 when the W.I.A. had a field day of portable-mobile equipment following the disastrous bush fires around the Clarendon, Kangarilla and Meadows areas. All sorts of gear was produced and operated by what is now known as the "older generation," and following a demonstration of "what could be done with how little" by Pete 5FM, a three-cornered hook-up was arranged by Launce 5LD—Pop to you—Uncle Tom 5TL and Pete 5FM, from Happy Valley, Golden Grove and Littlehampton, at a later date. Interstate contacts came thick and fast with only about 1 watt input, and Tom even used his outfit on the old steamer "Yandra" on his way back to Ceduna. However, this is history, not news, so nuff sed, or else VK4 and VK6 will be after me again!

Just goes to show how good Brian 5CA is as an auctioneer. At the end of his night's work he found he had sold himself a transmitter and modulator, which means that he will only have to sell himself a couple of power supplies and he will be in business other than W.I.C.E.N. It takes a good man to convince himself!

Had a talk to Brother John 5VG at the meeting and discovered that he is at Christian Brothers' College and occasionally on 14 Mc. when time permits. Better known on the air as "Griff," he hails from VK6, where he sat for his ticket but did not take out a call sign, although when the rowing season finishes in VK5 and his proteges put away their oars, he expects to have more time for air work.

Ron 5KS very affable and matey with me at the meeting. I discovered the reason a bit later in the night when he sneeringly let it be known that he had been on the air from his new QTH with a.m. for a while, but would be back to s.s.b. in a couple of days. How low can they get? There was I, under the impression that I had a convert, and all it was that he was "having a lend of me." I hope his XYL refuses to lend him her baking dish, or whatever it is he boasts that he uses in his experiments!

Alan 5ST came up to me at the meeting and offered me a 1930 penny for "The Thing" that he said I am always talking about in the notes. I almost fell over in my eagerness to sell, but woke up at the last moment that it was only an English penny, and worth face value. I don't know whose face, his or mine, but surely my clean cut and finely chiselled features are worth more than a penny. What's that? Was the chisel blunt? How dare you, Sir!

Noticed Darcy 5DJ sitting quiet and demure at the meeting. He tells me that he is not on the air yet, the chores associated with a new QTH don't permit even a thought along those lines, but he is optimistic.

Dave 5BF ambled in half-way through the proceedings at the meeting. He is tied up with school on meeting nights and therefore is quite a stranger, but he definitely has not lost his interest, still doing a little on 14 Mc., and is even tinkering with the thought of having a go at "The Thing." Ah—h, nothing makes me sick!

Albert 5ZL, now a confirmed user of "The Thing," tells me that my name was being bandied about on the "Sewing Circle" on 80 mx the other night. Be careful fellows, there is still a law for libel, and even an outcast like myself can invoke it. Tread carefully.

Vern 5VB—the Admiral to you—was looking a little down in the mouth, and sitting primly in the front row when I sighted him. The reason?—Oh, nothing much! He had been making a couple of modifications to his gold-plated crystal holders, necessitating the use of a drill, and forgot to remove the crystals. Need I say any more, no I don't think so either!!

Ron 5ZDC decidedly bent my ear on his new invention—perpetual motion—and I am still not sure who was pulling whose leg. However, he sounded very sincere and theoreticall to me, so much so that I almost asked him to let me in on a few shares. No doubt time will tell the true story, and I might yet be biting my finger-nails at the opportunity lost.

A certain ex-contact of mine in W land mentioned in a letter to me that during the big power failure in that part of the world recently, the radio station at which he works tried to start the emergency power engine, but nothing doing. The man on engine maintenance eventually had the doubtful distinction a little later, of carrying a spare 12 volt battery up 24 flights of stairs. What a punishment!

Well—I am off on my holidays—and guess who is doing the notes next month? That's right old S.S.B. himself, none other than Comps 5EF. You all have my sympathy, will he bend your ears on "The Thing"?

73 de 5PS—PanSy to you.

— . . . —

WESTERN AUSTRALIA

"Everything comes to those who wait." In other words, readers may find that they are reading notes sometimes eight weeks old. This happens when I put notes in the mail a couple of days after "A.R." has gone to press. This should explain to those mailed inquiries received.

I know that every reader will be pleased to know that George 6CH after a long stay in hospital is now home again, and we hope it's not too long before you are 100 per cent. fit and well again, George.

Several of the boys were made welcome on board H.M.A.S. "Perth" (missile carrier) during its stay at Fremantle. I believe that a special password was necessary to enable access to the red carpet treatment, Hi. Mention the name of W5WVX Ed Harwell, that popular and well-known radio op. of the U.S.S. "Gridley," and boy, you were received most honourably.

Note Lance 6LR on the breeze again. Very solid signal radiated from the piece of wire hanging out of the window, Lance.

Lately conditions on 80 and 40 have been very good, lots of activity too, mainly from a.m. stations.

Whilst in Perth area reading mail on 6 mx noted a couple of real old-timers, Wally 6AG, Skipper 6WS, going great guns and on discussion of very interesting topics.

Each morning fairly regularly on 80 at the top end of the band we hear a group called "The Razor Gang," consisting of Early Shavers 6KJ, 6AB, 6FG, 6XO, 6FD and Tom 6MK. All using the shaver and removing any whiskers while we talk 80 to say:

Clem 6CW having moved QTH did not waste any time in getting back on the air. Also from Aub 6XY, now s.s.b. home-brew, we hear most exclusive quality production of voice, certainly equal to most commercial rigs. Real fine business, Aub. Congrats.

Must make a correction re my last issue in giving Jack 6BU a double U instead of a single U. How's the fishing Jack, "lucky man."

Not much from 6CL Ian lately. Must be too busy at the new QTH taming the big eagles and mudwamps. You had better find time to get the rig going mate. We sure miss your humour, old buddy.

A new call sign at 6AF, sorry, did not get the handle. Welcome back to VK6 land. Don 9BR working Jim 6RU on 80 mx, solid signals both ways. Lionel 6LM with 9 watts working 6BE. Bob been very active on 15 lately also.

Well, that's it, chaps. 73, Bob 6KN.

— . . . —

TASMANIA

Let me start this month by welcoming the new members to your Council, these worthy gentlemen being Ted 7EJ, who has been our Federal Councillor for some years now; John 7ZJG, who works at our local commercial t.v. station; and Crosby 7CR, who is employed in the P.M.G. Dept. (don't ask me what branch), but wherever they work, they will, along with the rest of the Council, be working for you and the Division and the Institute as a whole for at least the next year, and with any luck at all, what a year it will be! The new Federal Constitution, being the biggest thing of course, and the year culminating in next Easter when all being well Tasmania will be Host Division to the rest of Australia for the Federal Convention of 1967, so not only your Council, but every single one of us will have a big job to do.

Our annual general meeting was attended by over 40 members this year. It was disappointing, however, that more members from the other Zones could not be present. They certainly missed a first class dinner and evening after the meeting, where over 60 OMs, XYLs, and YLs thoroughly enjoyed themselves. Quite a few seldom-seen faces showed themselves at the home of our President, Tom 7AL, on the Sunday morning after the dinner, when we held a monster disposal sale, and when we closed shop at 12 noon most of the monster was gone, and the club room fund was $200 plus better off. This fund is now getting to the stage where we can start thinking about **our** club rooms. When we first started our fund, so slowly it grew, but now it grows faster, and so this is another thing which we will be striving for this coming year—our club rooms.

Incidentally, I suppose I'd better mention your full Council for this year: Tom 7AL as President again, Terry 7CT is Treasurer and Vice-President, Crosby 7CR is Secretary, Ian 7ZZ Vice-President, with Ted 7EJ, John 7ZJG and myself making up the seventh.

Tom 7AL has had his "thing" (to use 5PS' term for it) on the air, and if it's possible, has a f.b. s.s.b. sig. He says it will be even better when he re-builds the power supply, and gets it going on full power.

This year's Athol Johnson Memorial Contest was won by the one and only Ian 7ZZ, with a mere 70 points. It was a very poor contest this year, but then quite a lot of would-be contestants were busy with other things I know, still we must congratulate Ian, not only for winning, but also for being the only one to submit a log, so what chance have the rest of us got anyway. Enough for now, it's bed time for me. One last thing, if you have not paid your sub., then it is high time you had! 73, Geoff 7ZAS.

NORTHERN ZONE

The annual general meeting held on 11th March presented us with new office-bearers: Peter 7FP as President, Peter 7ZPD as Secretary-Treasurer, Frank 7ZFR as Zone Correspondent, and Col 7LZ as QSL Manager. I am sure all our good wishes go to these members and many thanks to the retiring members.

A t.v. project has been started. I believe 7ZBW has the job of the tx, 7ZPD the power supply, and 7ZLX the sync. pulse generator. So to it and the best of luck.

Bevan 7ZBW is at present touring the East Coast of the big island, mobile 6 and 2 mx of course—VK2, VK3 and VK4 all included. No doubt there will be some good photographs of gear, some of it well stacked to the right proportions, as well as the more entrancing scenery that he will no doubt see, and with plenty of good news to grace our humble ears with.

Den 7DK went in April to VK2, VK3 and VK5 with that little muscovy of his. He tied up with old friends and worked a few more countries mobile into the bargain. Joe 7ZGJ has gone and accepted a position in VK2 at Wollongong. Don't worry Joe, there's plenty of us left to look after Loraine, and I am sure that I speak for all when I say the best in everything in your new adventure. Frank 7ZFR has gone and had himself half spliced; there's another on apron strings. Congratulations to you both.

The Hobbies Exhibition was held on 2nd April and a few locals turned out to operate the sparce equipment. Thanks are given to 7BR, 7PF, 7JO, 7ZLD, 7ZRF and 7ZPD for providing such an interesting display under the circumstances.

The north versus north-west picnic was enjoyed by all who attended. I am sure that the 6 mx net has never seen such activity in the north and it lasted all day. Mike 7ZMW provided a base. The usual game of cricket ensured, and the Northern Zone won the honours of the day, even with a score of side out for 15 runs. The coverted trophy was presented to 7PF, our President, with due ceremony. Thanks to the organisers, the North-Western Zone.

See you at the next meeting at 2000 hours at the Adult Education Centre, 51 York St., and remember subs. are now due. 73, Frank 7ZFR.

Repairs to Receivers, Transmitters; constructing and testing; xtal conv., any frequency; Q5-ers, R9-ers, and transistorised equipment.

ECCLESTON ELECTRONICS

146a Cotham Rd., Kew, Vic. Ph. 80-3777

Stockists of Radio and Electronic Components for the Amateur Constructor and Hobbyist

First Ring, Write or Call on

WILLIAM **WILLIS** & Co. Pty. Ltd.

428 Elizabeth St., Melb'ne. Ph. 34-6539

COMPUTER CIRCUIT BOARDS

Containing switching transistors, resistors, condensers, diodes, etc. 20c per transistor.

Also in stock: 1600v./0.75a. diodes, $1.50; OA200-type silicon diodes, 100 for $5.

Everything tax paid and post free. $2 min.

AUSTRALIAN ELECTRONICS

76 View Street, Hobart, Tasmania

A. R. R. L.

Associate Memberships (and renewals) are available by forwarding £2/14/- (plus 6d. interstate cheques) to:

Business Manager, W.I.A.,
49 Cookson Street,
Camberwell, E.6,
Victoria.

This includes the regular arrival of

"QST"

HAMADS

Minimum 5/-, for thirty words. Extra words, 2d. each.

Advertisements under this heading will be accepted only from Amateurs and S.w.l's. The Publishers reserve the right to reject any advertising which, in their opinion, is of a commercial nature. **Copy** must be received at **P.O. Box 36, East Melbourne, C.2, Vic., by 8th of the month** and **remittance should accompany** the advertisement.

COLLINS 32S-1, s.s.b., tx, in mint condition. Has a.l.c., vox and works DX when the going is tough, £300. Box 36, Queen Victoria Bldgs., N.S.W.

FOR QUICK SALE: KW2000 s.s.b. Transceiver with a.c. p.s.u. and Shure 201 ceramic mike, as new, £300 ($600), O.N.O. VK5XP, 5 Haldane St., Elizabeth Downs, S.A.

FOR SALE: American National NC400 Communications Receiver, 540 Kc. to 30 Mc., in 7 bands, separate bandspread scales on Amateur bands, 2 r.f., dual conversion, 3 i.f. stages, a.m., c.w., selectable s.s.b. reception, variable selectivity filters. VK3US, R. Clarkson, 26 Stewart St., Brunswick, Vic. 38-8929, mornings or week-ends.

FOR SALE: Hammarlund HQ-150, xtal filter, 100 Kc. calibrator, Q-multiplier, matching speaker, instruction book, one owner, $225. Heathkit DX-100, instruction book, assembled by owner, $195. Hy-Gain 3 elm 10 mtr. beam, Gamma match, instruction book, $20. Two R. L. Drake T.V. high-pass filters, $8 each. Regency transistor converter, model ATC-1, 80 through 10 mtr., $75. Reply W. Rogers, 44 Bruxner Crescent, Goonellabah, N.S.W.

FOR SALE: Heathkit RA-1 Ham-Band Receiver, 1.7 to 30 Mcs., u.s.b., l.s.b., c.w., crystal filter, inbuilt crystal calibrator, matching speaker, factory assembled, spare set valves, manual and avometer, all mint, £75. Pope, 17 Goode St., Dubbo, N.S.W. Phone 5657.

FOR SALE: Selsyns, 3 in. Magslip Mk. 4, 50v., 50 cycles, £3 pair. A.W.A. crystal filter, full double lattice (8 crystals), frequency 100 Kc. approx., complete in case, £10. VK2ZAZ, J. W. Carr, 5 McKay Street, Nowra, N.S.W.

FOR SALE: Swan Tri-Bander, 80-40-20 mx, 240w. p.e.p., complete with a.c. power supply and mike, like-new condition, £140. VK3NZ, 32 William St., Box Hill, E.11, Vic.

SELL: Geloso TX-222 in excellent condition, £59. Am going sideband. Write first to VK3AXE, 383 Warrigal Rd., Burwood, Vic.

SELL: 5" U.S. Navy-type Panoramic Adaptor, 30 Mcs., i.f., $90 (£45). 8" Jap. midget T.V., 1100v., a.c., d.c., or 240v. a.c., spare valves, circuit, $160 (£80). Both new. Will exchange both for Tri-Band Swan or similar. VK3RS, 46 Mayston St., E. Hawthorn, Vic. 82-1047.

SELL: 122 Transceiver, complete with 12 volt power supply and Jannoy microphone in mint condition, $45. Will forward freight collect. J. Lauten, VK1JL, 28 Atherton St., Downer, A.C.T.

WANTED: AR7 Communications Receiver, good mechanical condition, complete with all coil boxes, but power supply or speaker not essential. VK2AHI, R. Martin, Box 143, P.O., Casino, N.S.W.

WANTED: English Radar Equipment, pre-miniature valve, complete or part-stripped units. Particulars to J. Somerville, VK3ZCS, 24 Peachey St., Casterton, Vic.

WANTED: Galaxie III. Sell your 3-band rig for cash and invest in 5-band rig. Write first to Advertiser, 29 Pitt St., Ringwood, Melbourne.

A LARGE RANGE OF TRANSMITTERS, RECEIVERS, TEST GEAR, AND DISPOSALS RADIO PARTS AVAILABLE

★ **SIGNAL GENERATORS**

Type LSG10, 120 Kc. to 260 Mc., $26. Type LSG11, 120 Kc. to 390 Mc., provision for xtal, $30, both plus freight.

TE22 Audio Generator, freq. range: sine 20 c/s.-200 k/c., square 20 c/s.-25 k/c., in four ranges. Output, 7v. p-peak. Output impedance, 1,000 ohms, $42.

★ **C.W. TRANSMITTER**

80-10 metres. Geloso 4/102 v.f.o., 2E26 buffer, 813 final, pi-coupler output. Separate meters for grid and plate current. Excellent table-top rig. Less power supply, $50.

★ **POWER SUPPLIES**

300v. at 150 mA., 6.3v. at 3 amp., fully enclosed, on 19-inch panel, $6, complete with meter $8.

★ **METERS, P25 TYPE**

0-500 uA., $5.25; 0-100 uA., $6.95; 0-1 mA. $4.50; 0-10 mA., $4.50; 0-50 mA., $4.50. Full range of Meters and Multi-Testers available.

★ **CO-AXIAL CABLE**

UR70 72 ohms, 3/16 inch diam., in 27-yard rolls, $2 plus 75c pack and post. In as new condition.

★ **80-40 METRE TRANSCEIVER**

San Electronics QTR7. Tx: 6BQ5 p.a., 6BQ5 modulator, xtal locked. Rx: Tunes 3.5 to 11 Mc., 1 watt audio output, 230v. a.c., $90.

★ **SAL39 AMPLIFIER KLYSTRONS**

Pulse Service: 120w. input, 30kw. output, duty cycle 1%, freq. range 960-1230 Mc. **C.w. Service**: 50w. input approx., 300w. output approx. Ideal tube for 1296 Mc. band. $20 plus freight.

WANTED TO BUY

Communication Receivers, Test Equipment, etc. Call, write or phone. Equipment inspected and picked up at your convenience any night or week-end.

★ **GOLD PLATED CRYSTALS**

One only G.E.C. 1,000 c/s. vacuum mounted, gold plated Crystal. Octal base.

One only Marconi 2,000 c/s. vacuum mounted, gold plated Crystal. B7G base.

Prices for above on application.

★ **MINIATURE CAPACITORS**

New shipment. 600 v.w. Values: 0.001, 0.02, 0.005, 0.0005, 0.0002, 0.0001 uF. $2 for 80 plus freight.

★ **RESISTORS**

¼ watt, I.R.C., Welwyn, Eire, Ducon, Philips, $2 per 100.

★ **CRYSTALS**

Personal shoppers only, $1 each.

★ **AR7 COMMUNICATIONS RECEIVER**

Complete with five coil boxes. 120 Kc. to 25 Mc. 10 tubes. All resistors and capacitors replaced, immaculate condition. $90.

★ **SPECIALS**

813 Beam Tetrodes, $5 each.

7-pin skirted Valve Sockets, P.T.F.E., insulation, silver plated, only 20c each, c/w. shield.

★ **C.R.O. TUBES**

CV407, $1 each; CV392, $1 each.

★ **TRANSISTORS**

Brand new. OC72, OC44, 2N132, OC66, OC45, 80c each. AT1138 Power Transistor, 30w., Class B, $3. Also Diodes: OA71, OA81, OA95, 35c each.

ANY QUERIES

Beginners are welcome, ask Jim and Laurie Gardiner any questions. They are Amateur Radio operators and will be only too pleased to assist.

ALL ITEMS FREIGHT EXTRA

UNITED TRADE SALES PTY. LTD.

280 LONSDALE ST., MELBOURNE, VIC. (Opp. Myers) Phone 32-3815

Department of External Affairs

ANTARCTIC DIVISION

RADIO TECHNICIANS AND OPERATORS WANTED

Conditions of Employment. Two to four months preparatory work in Melbourne followed by approximately twelve months at the Station. Tentative sailing dates: — Macquarie Island — early December, Mawson and Wilkes — late December. Whilst absent from Australia, kitting and maintenance are provided free by the Commonwealth, and there is an allowance of 37½% of salary up to a maximum of $1400 (£700) per annum, in addition to which a district allowance of $650 (£325) for married men and $400 (£200) for single men is paid. Recreation leave accrues at rate of five weeks per annum. Subject to the provision of the Income Tax Assessment Act, Zone Allowance deduction of $540 (£270) may be allowable. Salaries commence within the appropriate range according to qualifications and experience. Employment will be in a temporary capacity under the Public Service Act 1922-1964.

SUPERVISING TECHNICIAN:

Mawson (1) Wilkes (1)

Salary including allowances* per annum: Married man: $5600 (£2800)
Single man: $5350 (£2675)

Duties: Instal and maintain HP transmitters up to 5 KW output, HP communication receivers, portable field equipment, ground aeradio communications and navigation equipment, radio teletype systems and fixed antenna systems and telephone lines and instruments.

Qualifications: Qualified Senior Radio Technician. Wide experience in the maintenance or installation and testing of radio communications transmitters and receivers and radio navigation equipment.

TECHNICIAN (RADIO):

Mawson (1) Wilkes (1)

Salary including allowances* per annum: Married man: $3764-4192 (£1882-2096)
Single man: $3514-3942 (£1757-1971)

Duties: Instal and maintain radio and communications equipment under supervision.

Qualifications: Radio tradesman with experience in the maintenance and installation of HP radio communications transmitters, receivers and associated equipment.

RADIO SUPERVISOR:

Macquarie Island (1)

Salary including allowances* per annum: Married man: $4426-4662 (£2213-2331)
Single man: $4176-4412 (£2088-2206)

Duties: Instal and maintain radio transmitting and receiving equipment, and act as Senior Radio Telegraphist.

Qualifications: Applicants should state any appropriate licence or technical diploma held by them. A thorough knowledge of theoretical and practical electronics plus a First Class Commercial Operators Certificate of Proficiency or equivalent service experience.

RADIO OFFICER:

Mawson (4) Wilkes (4) Macquarie Island (2)

Salary including allowances* per annum: Married man: $3920-4388 (£1960-2194)
Single man: $3670-4138 (£1835-2069)

Duties: Radio Telegraphist.

Qualifications: Commercial Operators Certificate of Proficiency or equivalent service experience, together with experience in operation and maintenance of ground installations.

SENIOR OBSERVER (RADIO):

Mawson (1) Wilkes (1) Macquarie Island (1)

Salary including allowances* per annum: Married man: $4662-4896 (£2331-2448)
Single man: $4412-4646 (£2206-2323)

Duties: Take meteorological observations and operate and maintain meteorological electronic equipment. The successful applicant for Mawson will be required to instal three centimetre wind finding radar equipment.

Qualifications: Applicants must have educational qualifications to Intermediate Certificate standard and be trained as Radio Technicians. Experience in microwave radar, related experience in pulse techniques and auto follow systems an advantage.

Training: Successful applicants will be trained at a course in Melbourne commencing on 18th July, 1966.

★ ★ ★ ★

Please note that all salaries quoted include allowances. These allowances are payable only whilst serving in Antarctica. Salary whilst on duty in Australia may be calculated by deducting allowances, e.g. a married man receiving $3794 (£1897) whilst absent from Australia would receive salary of $2286 (£1143) whilst in Australia, i.e. $3794 (£1897) less $858 (£429) (37½% of salary) less $650 (£325) (district allowance). A single man would receive $250 (£125) less than the married man because of variation in district allowance payable.

Applicants must be in robust health. Ice or snow experience not required but history of outdoor activities is desirable.

Applications, which must be accompanied by a recent photograph and the names of at least three referees, should be lodged with the undermentioned addressee:-

The Director,
Antarctic Division,
Department of External Affairs,
568 St. Kilda Road,
Melbourne, S.C.3, Victoria.

Please send me an application form for position of.....with the 1967 Australian National Antarctic Research Expeditions.

NAME.....

ADDRESS..... STATE.....

PLEASE COMPLETE IN BLOCK LETTERS
DO NOT ENCLOSE PHOTOGRAPH OR REFERENCES WITH THIS COUPON